# United States Patent [19]

**Task**

[11] **Patent Number: 4,554,544**

[45] **Date of Patent: Nov. 19, 1985**


[54] **DIFFUSE INCANDESCENT RUNWAY MARKER LIGHT APPARATUS FOR OVERT/COVERT OPERATION**


[75] Inventor: **Harry L. Task**, Dayton, Ohio

[73] Assignee: **The United States of America as represented by the Secretary of the Air Force**, Washington, D.C.



[21] Appl. No.: **536,142**

[22] Filed: **Sep. 26, 1983**

[51] **Int. Cl.**[4] ..... **G08G 5/00; B64F 1/18**

[52] **U.S. Cl.** ..... **340/953**; 313/116; 340/84; 340/947; 340/955; 362/62

[58] **Field of Search** ..... 340/947, 981, 950, 953, 340/952, 954, 955, 815.18, 84, 321; 362/227, 234, 252; 313/112, 116; 219/354



[56] **References Cited**

U.S. PATENT DOCUMENTS

| | | | |
|---|---|---|---|
| 2,039,647 | 5/1936 | House | 340/953 |
| 2,674,726 | 4/1954 | Williams | 340/953 |
| 2,816,277 | 12/1957 | Salkowski | 340/321 |
| 2,825,898 | 3/1958 | Stanley | 340/84 |
| 3,138,779 | 6/1964 | Murray, Jr. et al. | 340/26 |
| 3,457,545 | 7/1969 | Brown | 340/25 |
| 3,576,523 | 3/1971 | Lerbakken | 340/955 |
| 3,639,899 | 2/1972 | Ljungkull | 340/110 |
| 3,706,968 | 12/1972 | Turner, Jr. | 340/955 |
| 3,878,506 | 4/1975 | Young | 340/953 |
| 4,385,354 | 5/1983 | Hornfeld et al. | 340/952 |
| 4,386,292 | 5/1983 | Rothwell et al. | 313/112 |



*Primary Examiner*—James J. Groody
*Assistant Examiner*—Brent A. Swarthout
*Attorney, Agent, or Firm*—Donald J. Singer; John R. Flanagan



[57] **ABSTRACT**

A diffuse incandescent runway marker light apparatus has a housing with a visible light diffusing plate mounted in one end and an infrared light diffusing plate mounted in the other end, and a pair of incandescent light sources mounted in the housing and aimed toward the respective housing end plates. A switch, when flipped to a first position, turns on one light source for producing visible illumination and turns off the other light source. The switch, when flipped to a second position, turns off the one light source and turns on the other light source for producing infrared illumination. In such manner, the appropriate type of illumination for marking the runway for overt or covert landing operation may be selected. When the switch is flipped to a third position, both light sources are turned off.

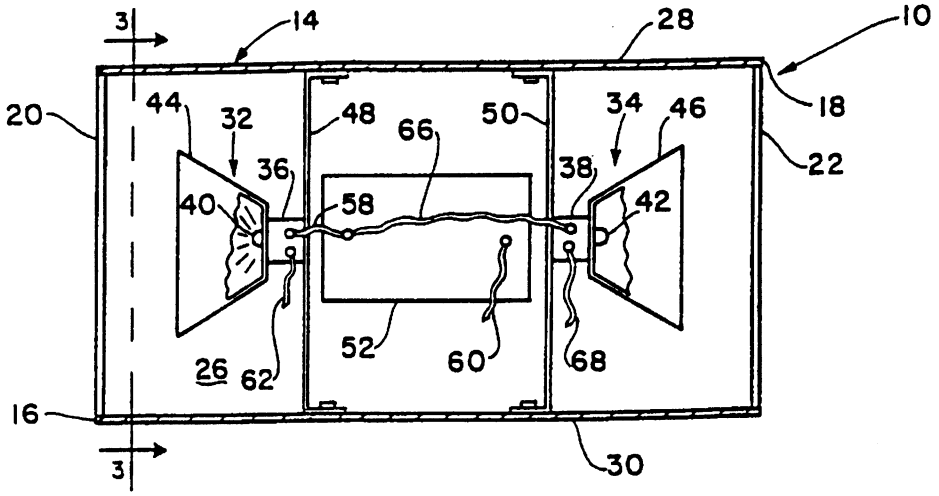
**4 Claims, 4 Drawing Figures**