(12) **United States Patent**
Task et al.

(10) Patent No.: **US 6,194,701 B1**
(45) Date of Patent: **Feb. 27, 2001**

(54) **PORTABLE NIGHT VISION GOGGLE HAZE AND TRANSMISSIVITY MEASUREMENT DEVICE**

(75) Inventors: **Harry L. Task**, Dayton; **Alan R. Pinkus**, Bellbrook; **Sheldon E. Unger**, Englewood, all of OH (US)

(73) Assignee: **The United States of Americas as represented by the Secretary of the Air Force**, Washington, DC (US)

(*) Notice: Subject to any disclaimer, the term of this patent is extended or adjusted under 35 U.S.C. 154(b) by 0 days.

(21) Appl. No.: **09/287,078**

(22) Filed: **Apr. 6, 1999**

(51) **Int. Cl.**[7] **G01N 21/59**; G01N 21/958

(52) **U.S. Cl.** ..... **250/214 VT**; 356/432; 356/333

(58) **Field of Search** ..... 250/214 VT, 216, 250/559.16, 559.17, 330, 333, 339.11, 341.8; 356/432, 433, 434, 435, 443, 445, 446, 447, 448, 337, 338

(56) **References Cited**

U.S. PATENT DOCUMENTS

4,623,258 * 11/1986 Task et al. 356/432
4,687,338 * 8/1987 Task et al. 356/446
4,764,007 * 8/1988 Task et al. 351/243
4,946,282 * 8/1990 Task et al. 356/432
5,712,709 * 1/1998 Task et al. 356/432

* cited by examiner

Primary Examiner—John R. Lee
(74) *Attorney, Agent, or Firm*—Bobby D. Scearce; Thomas L. Kundert

(57) **ABSTRACT**

Device and method are described for measuring transmissivity and haze in transparencies as detected through night vision goggles, including an emitter portion and a sensor portion, the emitter portion including a first light source for presenting an image to the sensor portion through the transparency and a second light source for projecting a haze producing light onto the transparency, the sensor portion including a light intensifier tube and a photometer for measuring the luminance output of the light intensifier tube and quantifying attenuation (transmissivity) and haze (light scatter) characteristics of the transparency as viewed through night vision goggles.
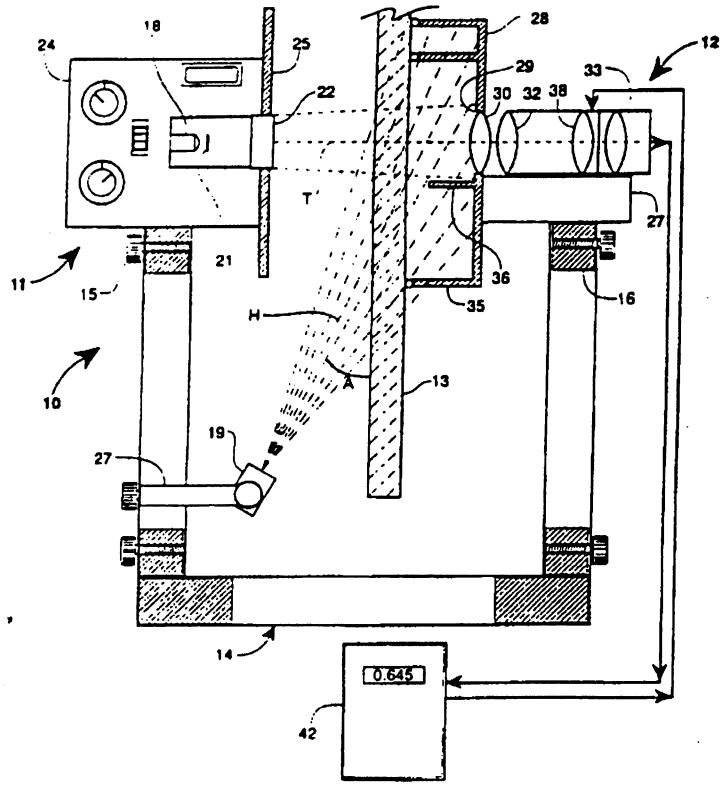
6 Claims, 3 Drawing Sheets