ASC091-0785 Cleared 27 Mar 91

Visually Coupled Systems (VCS): The Virtual Panoramic Display (VPD) "System"

by

Dean F. Kocian
USAF Armstrong Aerospace Medical Research Laboratory
Wright-Patterson AFB, Ohio

Abstract

This paper describes the development and impact of new visually-coupled system (VCS) equipment designed to support engineering and human factors research in the military aircraft cockpit environment. VCS represents an advanced man-machine interface (MMI). Its potential to improve aircrew situational awareness seems enormous, but its superiority over the conventional cockpit MMI has not been established in a conclusive and rigorous fashion. What has been missing is a "systems" approach to technology advancement that is comprehensive enough to produce conclusive results concerning the operational viability of the VCS concept and verify any risk factors that might be involved with its general use in the cockpit. The advanced VCS configuration described here, has been ruggedized for use in military aircraft environments and was dubbed the Virtual Panoramic Display (VPD). It was designed to answer the VCS portion of the "systems" problem, and is implemented as a modular system whose performance can be tailored to specific application requirements. The overall system concept and the design of the two most important electronic subsystems that support the helmet-mounted components, a new militarized version of the magnetic helmet mounted sight and correspondingly similar helmet display electronics, are discussed in detail. Significant emphasis is given to illustrating how particular design features in the hardware improve overall system performance and support research activities.

Introduction

The last six years of advanced military equipment development activity, and particularly the last four, have been marked by a renewed interest in the application of visually coupled system (VCS) technology to the military aircraft cockpit. Not since the early to mid 1970s has the activity level been so intense for militarized versions of this technology. Much of the renewed developmental activity has, rightly, concentrated upon the helmet mounted display portion of the VCS. This fact is demonstrated by new helmet mounted displays (HMDs) from such manufacturers as Hughes Aircraft, Kaiser Electronics, GEC, and Honeywell, and from DOD activities like the Army LH Helicopter Program, the Air Force F-16 Night Attack Program, and the joint Navy-Air Force INIGHTS Program. The emphasis on HMD design, particularly its size and weight, is because they have been a major performance-limiting factor to the widespread safe use of the technology in ejection seat aircraft. However, the successful integration of VCS technology into the cockpit includes the solution to a number of utilization and performance problems that cross the boundaries of many technical disciplines (see references [01,02,07]).

It can be argued that, in many instances, a "best" approach to either investigating or solving VCS performance and utilization issues, is to have at hand state-of-the-art (SOA) hardware that has the required "programmability" to support engineering and human factors research and also the ruggedness to be operated in the final intended environment, in this case the military aircraft cockpit. Until the advent of the VPD development program, this type of hardware, representing SOA, dedicated instrumentation specific to the VCS technology area, had been missing. This paper investigates some recent development activities at the Armstrong Aerospace Medical Research Laboratory (AAMRL) involving the VCS electronics that directly support the helmet mounted components. The discussion covers the rationale surrounding their primary operational characteristics and their impact on the current state of VCS technology.

A "Research-Oriented" Visually Coupled System

Figure 1 depicts one variation of a VCS system, the Virtual Panoramic Display (VPD). This system is designed primarily to support VCS whose helmet-mounted displays (HMDs) use miniature cathode-ray-tube (CRT) image sources. The VPD provides the basic helmet tracking and display presentation capabilities. It also supplies the configuration programmability, interface flexibility, and self-contained data collection needed to support advanced research activities.

The display subsystem of the VPD, the HMD, may include either one CRT image source and one or two optical channels, providing a monocular/biocular display presentation, or 2 CRTs with dual independent optical channels making possible a true binocular presentation. The visual fields may be either fully or partially overlapped, and may be aligned, using programmable electronics, permitting, if desired, the presentation of stereoscopic images. The CRTs, employing, in most cases, narrow-band emission phosphors, may be any of the standard bipotential electron lens designs commonly available, or be of an advanced design including additional grid control

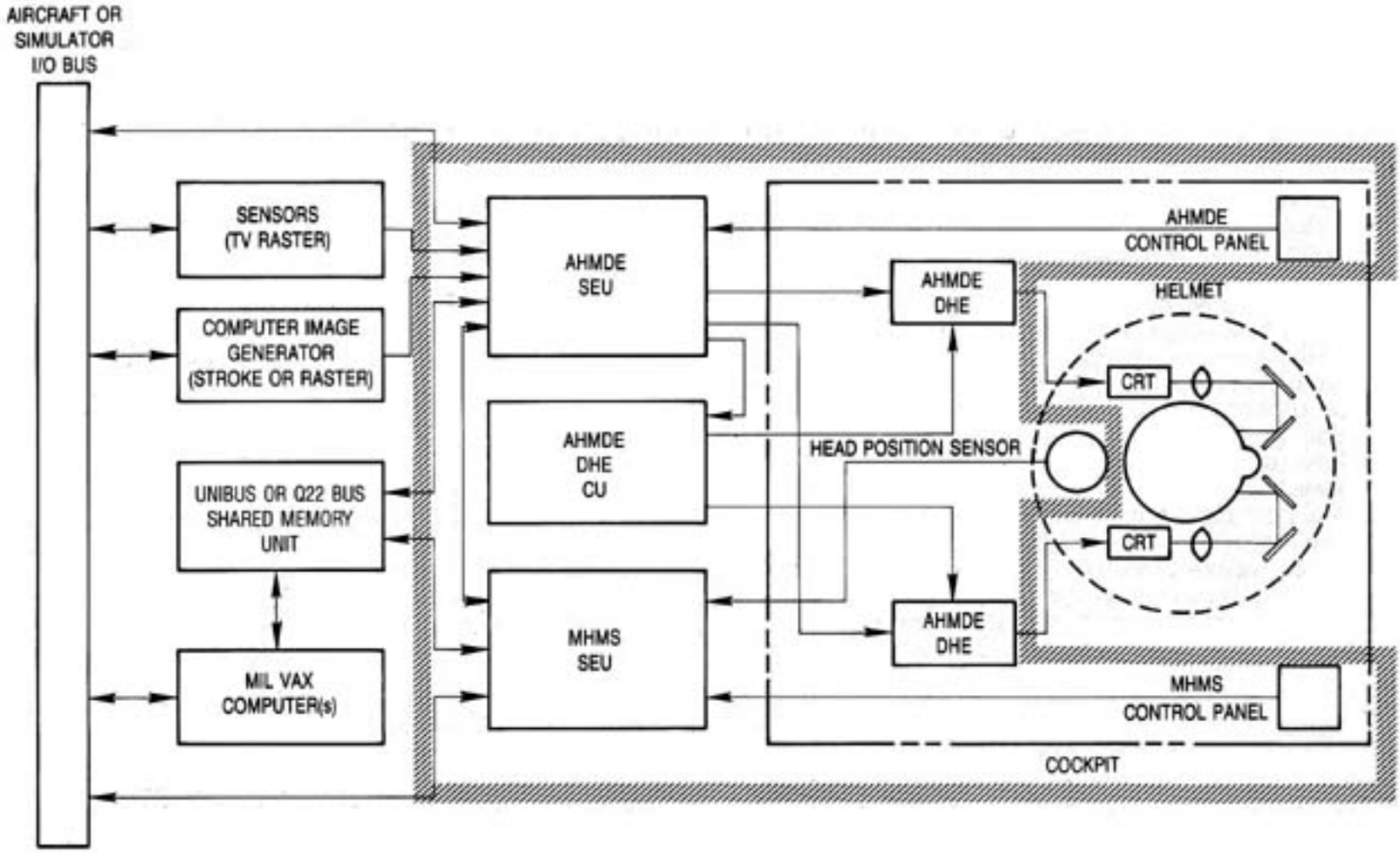

FIGURE 1
Block Diagram of Generic VCS System Hardware

elements. The CRTs are interfaced to specially-designed analog helmet-mounted display electronics (AHMDE) which 'tailor' the displayed information to the requirements of both the HMD optics and CRT. A major thrust of current visual display research for the military cockpit assumes that mission equipment package (MEP) data and sensor-generated information must be 'fused', in part visually, in some optimal manner on the HMD to help improve the pilot's moment-to-moment situation awareness. Thus, the VPD AHMDE has been designed to support a range of anticipated video input combinations for sensor-generated and computer-generated visual information that can be displayed simultaneously on the CRT.

Much of the displayed information must be changed and/or updated, based upon the pilot's instantaneous line-of-sight (LOS) and helmet position within the cockpit. To support this function, an AC magnetic helmet mounted sight (MHMS) is included to provide both helmet attitude and position vectors. The newer version of the MHMS used for this VCS configuration can be programmed to compensate for certain environmental disturbances to which it is susceptible.

To promote ease of programming and transition to-and-from ground-based and airborne research environments, a combination of Digital Equipment Corporation Q-Bus and UNIBUS processors and Motorola 68000 family VME processors have been employed as both imbedded and stand-alone processors. To facilitate data transfer beyond the limitations of the military 1553B data bus, a variety of high speed interfaces including a multi-port shared memory (MPSM), which exists in both laboratory and militarized form, were developed. The MPSM allows up to ten DEC or VME-based processors to simultaneously perform parallel read and write operations between each other. To facilitate non-volatile memory storage, militarized hard disks are available for the DEC-based processors and EEPROM for the VME-based processors. This architecture fosters ease of expansion when additional processing power is needed, and permits additional enhancements, such as auditory localization and physiological test battery monitoring, to be added to the basic VCS, as needed and available.

The shaded area of Figure 1 represents the core components of the VCS electronics subsystem for most near-term VCS configurations. This paper will focus the remainder of the discussion on just the portion of the shaded region that includes the AHMDE and MHMS, emphasizing advancements that facilitate not only hardware performance, but also improve or facilitate the VCS interface and research activities. Some discussion in a similar vein relating to the helmet mounted display components can be found in [01,02].

The Helmet Mounted Display Electronics "The Key to Miniature CRT Performance"

When the VPD development program was begun there was no general purpose helmet mounted display display electronics (HMDE) capable of operating different types of HMDs with inputs from a variety of display input sources. The problem was further exacerbated by the ongoing performance improvements in miniature CRTs, which at that time, available off-the-shelf display electronics could not support. There were also a number of deficiencies relating to how disparate video images were processed and combined for display on the HMD. The initial approach attempted a comprehensive all-digital update of not only the display electronics functions but also graphics processing and image processing functions, that were felt to be necessary to support the complete visual-interface concept for a large or medium FOV virtual head-mounted panoramic display. When this proved too ambitious for available program resources, development work was refocused to concentrate upon just the badly needed primary display electronics improvements. Among the more important of these were;

1) Allow the display electronics to optimize each CRT's grid control voltages for best performance, and store these parameters in local memory for instant recall if a CRT change had to be made,

2) Permit complete system setup and adjustment, including HMD alignment pattern generation, and allow this to be accomplished from the cockpit without the need to pull boxes, adjust potentiometers, etc.,

3) Provide sufficient deflection, video, and high voltage power to support the latest advancements in miniature CRT technology,

4) Provide the best possible video and deflection signal quality because of its more noticeable visual effect under the magnification of the CRT format by the HMD optical system,

5) Provide two separate video channels for binocular HMDs, accepting two raster and one stroke video input to support all but the most sophisticated VCS applications,

6) Provide automated system input flexibility to permit the use of raster image sensors having a wide range of line rates, and allow the internal raster generator to be synchronized to external video raster sources, and

7) Accept the HMS signals directly, to provide the right combination of raster imagery rotation and translation for a specific HMD design at the refresh rate of the HMD electronics.

To appreciate the significance of the new AHMDE design, one must understand how the above features and functions contribute to VCS performance. To accomplish this, the design of the AHMDE display electronics must be described in the context of the performance requirements placed upon it by the HMD optical system and CRT image source.

Serious use of the HMD dictates that it be considered an application specific animal. Indeed, many applications of VCS technology have resulted in less than desirable outcomes because off-the-shelf HMD systems were utilized instead of a design intended specifically for a given application. The most general example of an HMD application is one involving a particular aircraft and sensor suite whose field-of-view and resolution performance are already defined. Normally, it is desirable to match the FOV of the HMD to that of the primary sensor, because this places the least demand on image source performance, allowing the best contrast, luminance and resolution conditions to be obtained from the CRT. It also permits a 1:1 ratio to be set between the display and see-through image. For a more completion discussion of these interface issues, see reference (02). The next step in the integration sequence is to insure that the display electronics can adequately tailor the CRT display format characteristics to support the given application. The AHMDE represents the first time that a militarized VCS display electronics has been designed from 'scratch' to provide the type of system integration tailoring that is required.

The AHMDE: "Designing and Building a Better Display Electronics Mousetrap"

Figure 2 depicts the basic VPD AHMDE components. The heart of the system is the system electronics unit (SEU). This box contains all of the power supplies and computerized parameter control and signal processing circuitry necessary to support a wide range of separate signal inputs from stroke and raster video signal source inputs for two miniature CRTs and tailor these signals for proper output to most types of miniature CRTs now available or being developed.

The display head electronics (DHEs) contain the final video and deflection amplification circuitry, miniature militarized high-voltage power supplies, and a microprocessor to set voltage levels, gain, offset, etc. for each particular CRT's optimum performance characteristics. The deflection amplifier employs high-performance power FETs in a Class-A amplifier arrangement to maximize linearity and repeatability of pixel placement on the CRT. The video amplifier employs a low noise, low output impedance design to maintain signal bandwidth while driving a 6 to 8 foot helmet cable that may exhibit considerable distributed capacitance. There are two separate DHEs to permit more flexibility in the use of each video channel. Such a configuration allows either one binocular HMD or two separate biocular or monocular HMDs to be operated with one AHMDE SEU. To maximize power dissipation for even the most demanding experimental operating conditions and minimize DHE size, liquid cooling of the DHEs (distilled water or an appropriately conditioned liquid, if freezing temperatures are expected) is employed.

The requirement for liquid cooling necessitated the addition of a cooling unit (CU) box that incorporates a militarized pump, heat exchanger, and the regulated voltages for the high voltage power supplies located in the DHEs.

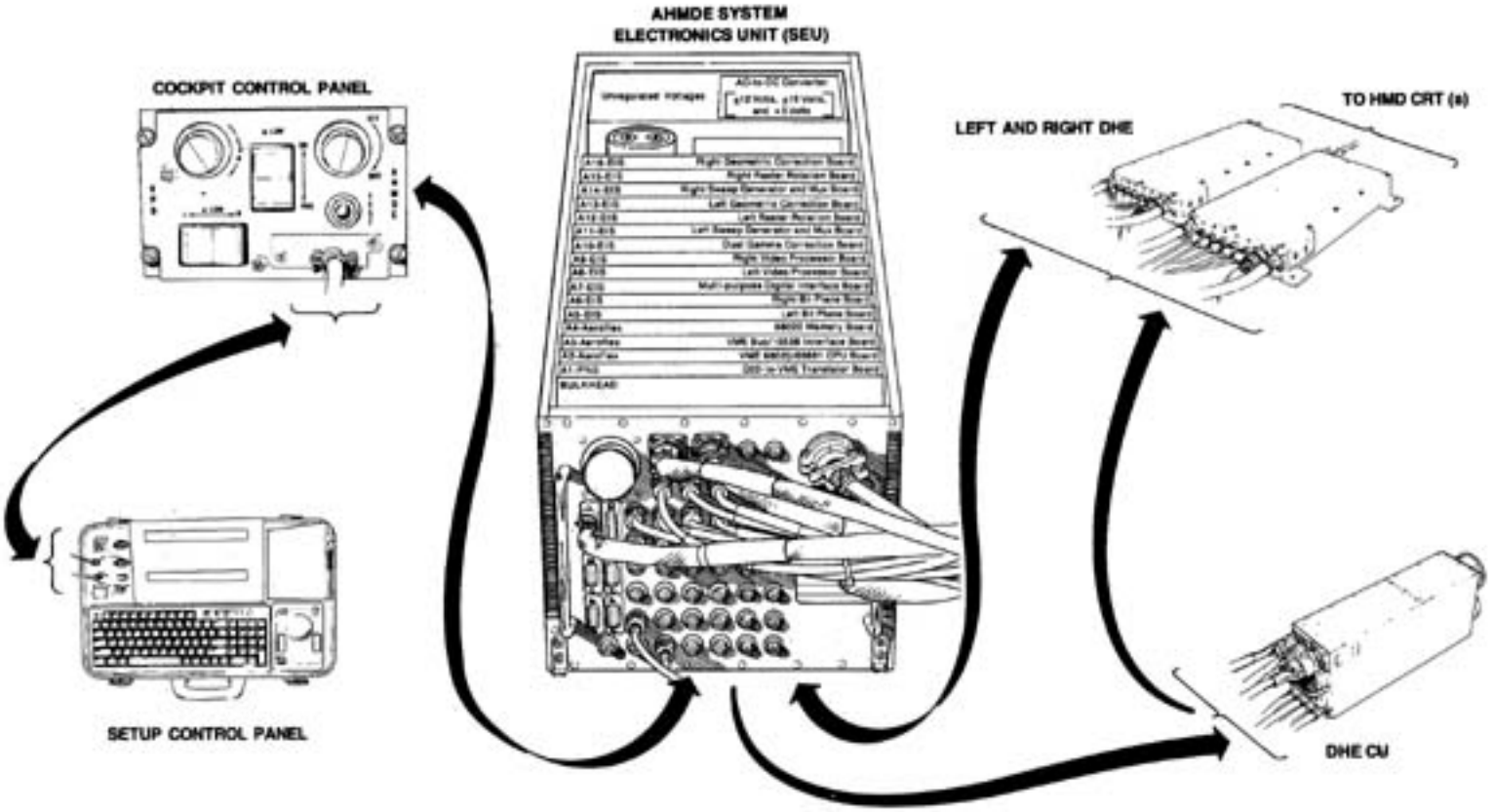

FIGURE 2
VPD AHMDE System Concept

A simple control panel (CP) that incorporates night-vision-goggle-compatible electroluminescent lighting allows adjustment of either CRT's stroke and raster video luminance and contrast. The CP also supplies the system interface for a unique setup control panel using a menu driven software interface that allows the experimenter or technician to adjust all critical system parameters, including HMD-CRT electronic alignment and CRT replacement, without removing the equipment from the simulator or flight test aircraft.

The AHMDE SEU

Figure 3 depicts a simplified block diagram of AHMDE SEU functions. The AHMDE SEU contains the bulk of the electronic signal processing circuitry to permit the AHMDE's raw signal processing performance and programmable features to be tailored for maximum benefit. The AHMDE SEU contains three primary signal processing groupings organized as digital and analog subsystems.

Digital Subsystem

The digital subsystem is comprised of the embedded VME processor and associated digital cards that implement data processing and transfer between external and internal destinations. Acting as the focal point for the AHMDE's extensive HMD video processing functions is a militarized 68020 VME CPU and processor board set. These boards store and execute the runtime code from a mixture of EPROM, EEPROM, and SRAM memory.

In order to support large, multiprocessor applications, an associated shared memory board provides parallel address and data transfers for VME and Digital Equipment Q22 or Unibus based computers. A 1553B serial interface for communication through the standard military aircraft digital bus and several RS-422 serial digital links are also provided. However, the proper use of all these external communication options requires the development of special software for application-dependent I/O drive routines to pass application-specific parameters from the aircraft or simulator bus to the AHMDE.

The AHMDE's internal memory also permits storing setup parameters for a number of HMDs and more than 100 different miniature CRTs. This allows the system to be adjusted for a variety of test configurations within a minimal time period. The AHMDE SEU, upon receiving the appropriate commands from either the cockpit or setup CP, selects the correct HMD alignment patterns from memory and moves the pattern data to the internal left and right bit-plane boards. These alignment patterns are normally configured for a specific HMD, and must be preprogrammed into the AHMDE's PROM memory. The bit-plane memory can also be used for the dynamic portrayal of simple space-stabilized head-up display (HUD) formats, if a particular VCS application does not have graphics processor electronics available. Again, as for the communication interfaces, the proper application-dependent software routines must be present to correlate the dynamics of such data with a particular symbol or alphanumeric character.

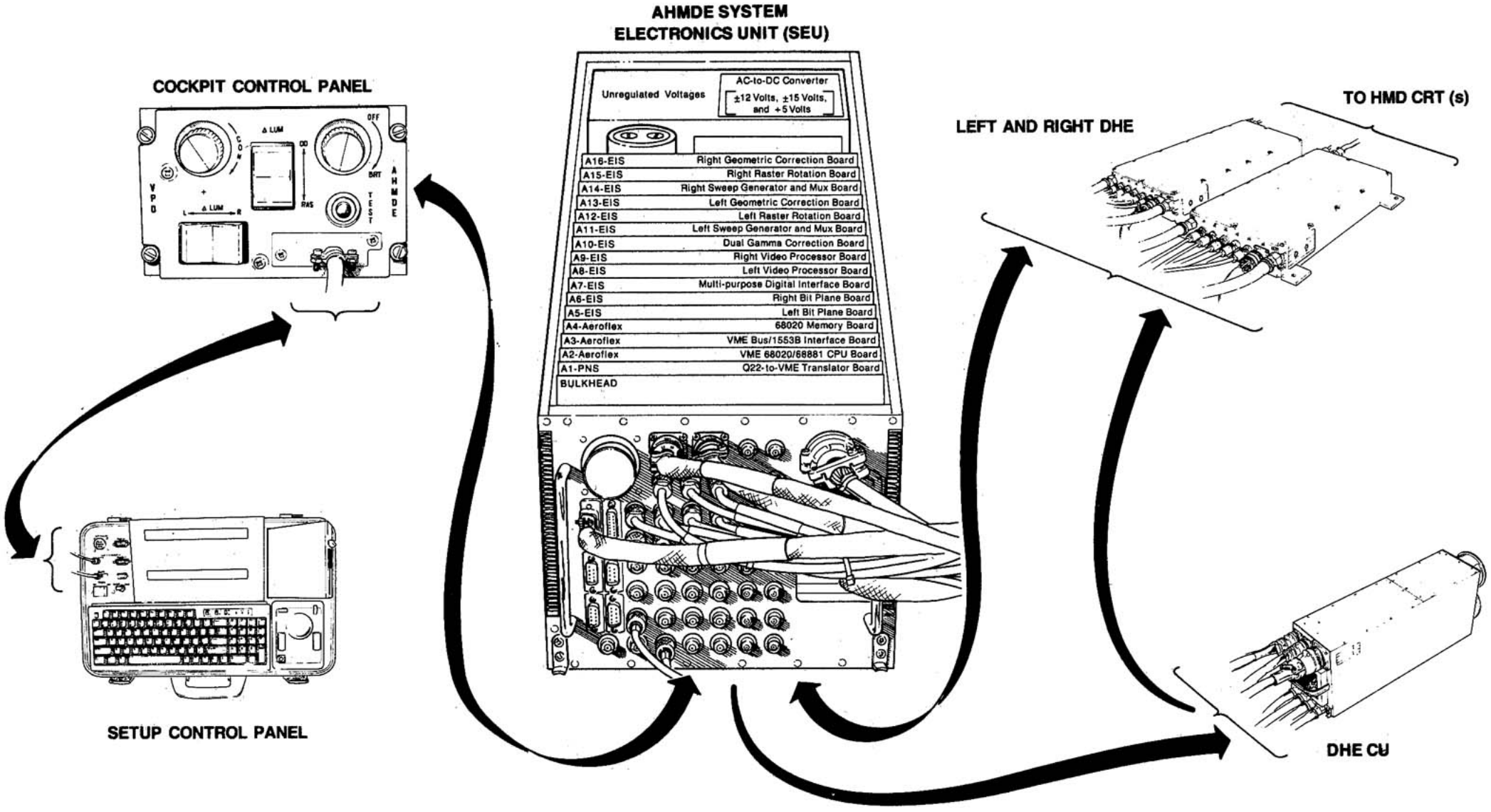

FIGURE 2
VPD AHMDE System Concept

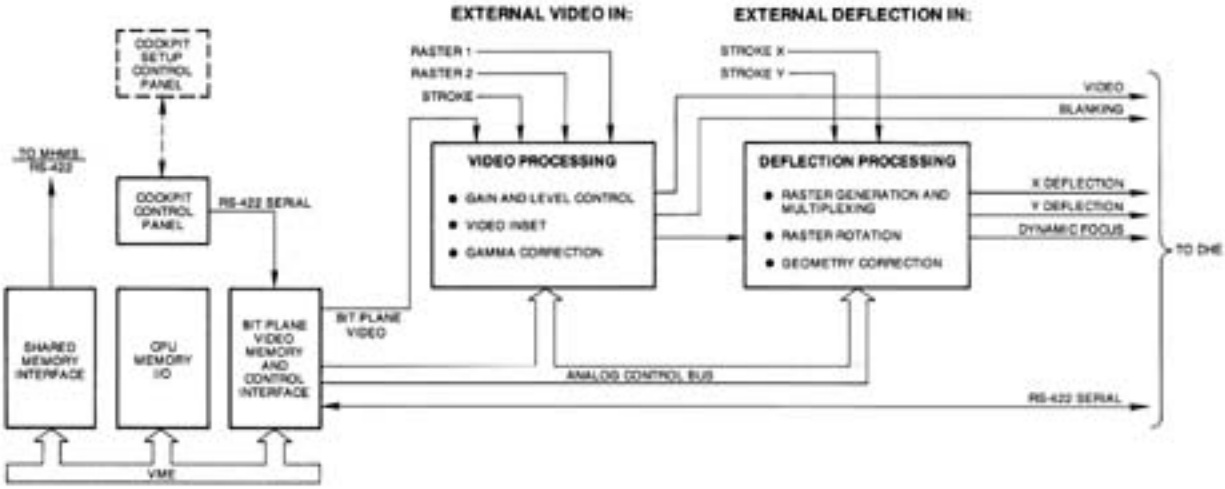

FIGURE 3
Simplified Diagram Of Major AHMDE SEU Functions

Analog Subsystem: Video Processing

The AHMDE's analog video processing section implements a number of important functions for the HMD visual environment. The normal gain and level controls have been expanded to separately accommodate two external raster sources, raster video from the internal bit plane image generator, and one stroke video source.

Raster 1 (see Figure 3) is designated the master raster and the internal bit plane video is synchronized to it, allowing it to be viewed separately, windowed, split-screened, or added into the raster 1 image. Although originally intended as a VPD HMDE function, the AHMDE does not digitally sample incoming video and perform scan conversions. Therefore, video on the raster 2 input must be in frame synchronization (FS) with raster 1. If only FS, but not line synchronization (LS), is present for raster 1 and 2, then they may be displayed in a vertical split-screen presentation. If both raster 1 and 2 inputs have the same FS and LS, a portion of raster 2 may be inset (windowed) into a user programmable portion of raster 1.

The AHMDE video processor also supports a number of more subtle requirements associated with VCS HMD applications. Each AHMDE video channel is designed to provide geometric shading and circular blanking (as received from the deflection processing subsystem). These functions compensate for video and optical effects associated with binocular HMDs (particularly those that are partially overlapped). They also support the often-present need to overscan the CRT raster in the horizontal direction to provide the largest CRT raster format possible for a given size CRT, operated at a specific aspect ratio (see reference [02]).

Many of today's high resolution, high luminance miniature CRTs often exhibit distinct nonlinearities in the luminance gray shade profiles. This condition is usually most noticeable with the brightest gray shades. To allow the CRT luminance function to be corrected to a more linear and desirable luminance function, programmable gamma correction has been included.

Analog System: Deflection Processing

The special requirements of the VCS video environment have as much impact on the video deflection system, perhaps more so, as they do for the video signal functions. To support the video input options, each deflection channel incorporates two separate multi-rate raster generators. These permit switching between raster sources having different rates. When changing between rates, the AHMDE's sweep generators eliminate size adjustments with automatic size control.

VCS applications often require that the imagery displayed on the HMD be stabilized with respect to a coordinate frame other than the head as the head is moving about the cockpit or crew station. Depending upon the HMD configuration (see reference [02]), proper stabilization requires either a pure rotation or a combination of a rotation and translation of the display imagery as the head/helmet moves. The head tracking signals needed to perform the calculations for the imagery stabilization are obtained through a high speed serial bus connected between the AHMDE and a helmet orientation and position tracking system such as the VPD MHMS (as shown in Figure 1). The AHMDE supports this requirement only for raster based imagery. Stroke imagery must be rotated and translated at its source.

As explained in detail in reference [02], the CRT is a Tangent (theta) mapped system, while most HMDs obtain maximum optical performance and minimum weight using F(theta) mapped optical designs. Specific optical designs, whether they are monocular or binocular, may have other types of distortion that must be compensated for by nonlinear mapping of the CRT image. Finally, the CRT, itself, may have internal distortion requiring correction due to the interaction of

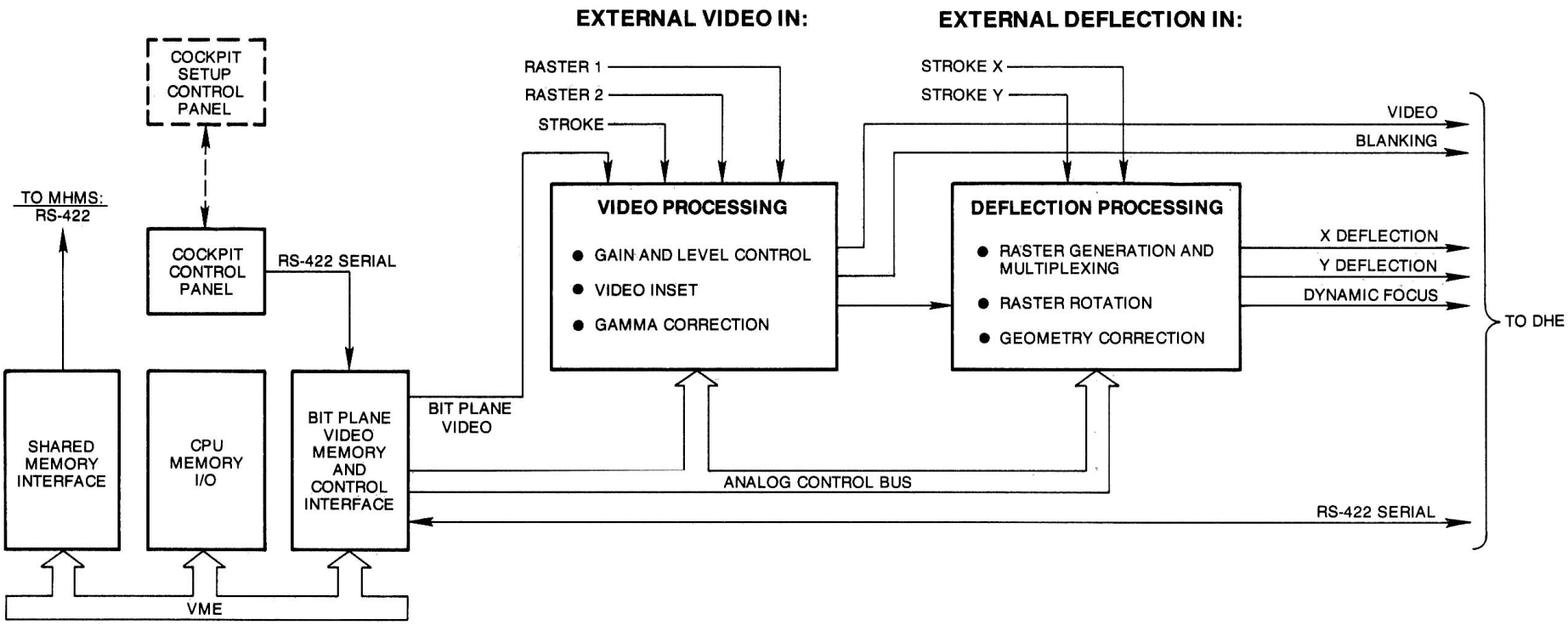

FIGURE 3
Simplified Diagram Of Major AHMDE SEU Functions

the deflection yoke, electron gun and e-beam. Given the magnitude and types of distortion associated with HMDs, even-order compensation, up to fourth order terms, would be desirable. However, signal-to-noise considerations in the AHMDE electronics effectively limit the geometric correction to third order terms. Thus approximations must sometimes be made for a given optical system, but the correction obtained is usually sufficient in subjective terms relating to viewer comfort, if not in terms of absolute measurements.

A larger CRT image requires less magnification by the optics. Since the exit pupil diameter for the HMD is the relay lens (more properly, objective lens) effective aperture divided by magnification, the relay lens can have a smaller diameter, i.e., a higher f-number. This makes it smaller, lighter, less expensive, and, possibly, of higher optical quality. To reduce the required optics magnification, and therefore working f-number of the HMD optics, the image is usually overscanned in the horizontal direction to enlarge the vertical height of the display format for a given aspect ratio. If this requirement and any rotations or translations force the scanned area to move off the phosphor quality area of the CRT, the AHMDE deflection circuitry incorporates circular blanking to extinguish the beam as it moves off the predetermined limits of the phosphor.

Taken together, the AHMDE's "designed in" functions allow it to drive almost any type of HMD now available or planned, using inputs from most standard video or stroke sources. Its programmability allows ease of use and repeatability of operating conditions for both the engineer and researcher. An itemized list of basic AHMDE performance is summarized in Table 1. A more complete description of the AHMDE's physical and electronic characteristics can be found in reference [06].

The Helmet Mounted Sight "Providing a More Complete System Concept"

Despite employing AC MHMS technology that has been available in some form for 20 years, the VPD MHMS really represents a more notable advancement in VCS technology than does the AHMDE. Many critical pilot activities involve, to some degree, the rapid acquisition of information, the accurate and fast positioning of display symbology depicting system state, and, after suitable cognition time on the pilot's part, the execution of one or more aircraft system state changes. If the man-machine interface (MMI) through which this interaction is being effected is a VCS, then the spatial relationships and positional accuracies of information portrayed on the HMD, as determined by the HMS position and orientation (P&O) tracking data, are extremely important. Not only must the quality of HMS attitude and position information meet some known and repeatable baseline level of accuracy, but it is also desirable to enhance the VCS's immunity to environmental disturbances to which the HMS or human operator are susceptible (at least in a "signal-to-noise-sense" to a threshold near or slightly beyond the limits of system-aided human perception). The magnetic helmet mounted sight (MHMS), despite the complexities of correcting for electromagnetic scattering, is still regarded as the HMS system of choice because of its rugged small transducers, immunity to other types of environmental problems associated with military vehicles, and the speed and accuracy of the six-degree-of-freedom (6DOF) orientation and position data that the MHMS can provide.

When the VPD development program was begun, there were still a number of significant deficiencies that had been noted concerning the operational characteristics of the AC MHMS. Among the more important of these were;

TABLE 1
Summary of Basic AHMDE Performance

Item	Parameter	Performance
1	Video line rates	Any line rate to 65 kHz scan rate
2	On-axis linearity	At least 0.25%
3	Spot motion and jitter	<0.0005"
4	Step response	
	Small signal (10% display width)	<800 nsec to 0.1% of final position [Rise time = 816 nsec, Fall time = 970 nsec to 0.1%]
	Large signal (100% display width	<2.5 μsec to 0.1% of final position [Rise time = 2.3 μsec, Fall time = 2.39 μsec to 0.1% at 4.6 amps peak-to-peak]
5	Z-axis bandwidth	60 MHz (−3dB) [62 MHz (−3dB)]
6	CRT grid voltage stability	
	Anode	
	Ripple	Better than 0.05%
	Regulation	Better than 0.2%
	Other control voltages (G2, etc.)	
	Ripple	Better than 0.05%
	Regulation	Better than 0.1%
7	Distortion compensation	To 3rd order with cross-product terms
8	Delay lines	10–630 nsec @ 10 nsec steps

[ ] Indicates actual measured system performance

1) Its susceptibility to radiated electromagnetic interference from the head-mounted miniature CRT magnetic deflection yoke(s),

2) Limitations in the motion box of the helmet sensor,

3) Line-of-sight (LOS) accuracies that were not compatible with the HUD accuracies,

4) Update rates that were marginal for some applications, and could not usually be "synced" to a master system clock, and

5) Its inability to support research into biodynamic interference suppression.

Figure 4 depicts the system concept, organization, and primary system elements of the new VPD MHMS.

The key to improving the performance of the advanced VPD MHMS system is its new position and orientation (P&O) algorithms developed by Green Mountain Radio Research Company (GMRR) under AAMRL's direction, and the hardware parallel-processor architecture developed by the Kaiser Electronics subsidiary, Polhemus, Inc (PI). The new algorithms improve system tracking accuracy and permit the effect of many environmental disturbances to be substantially reduced. The primary P&O tracking algorithm is a minimum variance linear estimator (MVLE). The MVLE makes direct use of the magnetic-field characteristics, and satisfies three objectives: (1) obtaining a least-squares best fit to the measured magnetic fields, (2) providing minimum expected mean-square error in P&O, and (3) providing maximum-likelihood P&O estimates. Under conditions of very rapid and continuous head movements, the MVLE algorithm cannot provide convergence to an accurate P&O solution. As shown in Figure 4, "supervisory" software checks for such conditions, and, when detected, switches the P&O solution process to a nonlinear estimator (NLE) algorithm. The NLE makes direct, noniterative estimates of P&O, and, while its accuracy is not as great as the MVLE, its stability is absolute. Thus the MVLE and NLE are complementary. Under normal operating conditions, the MVLE provides the most accurate P&O estimates, while the NLE ensures correct initialization and recovery from very large and continuous step inputs

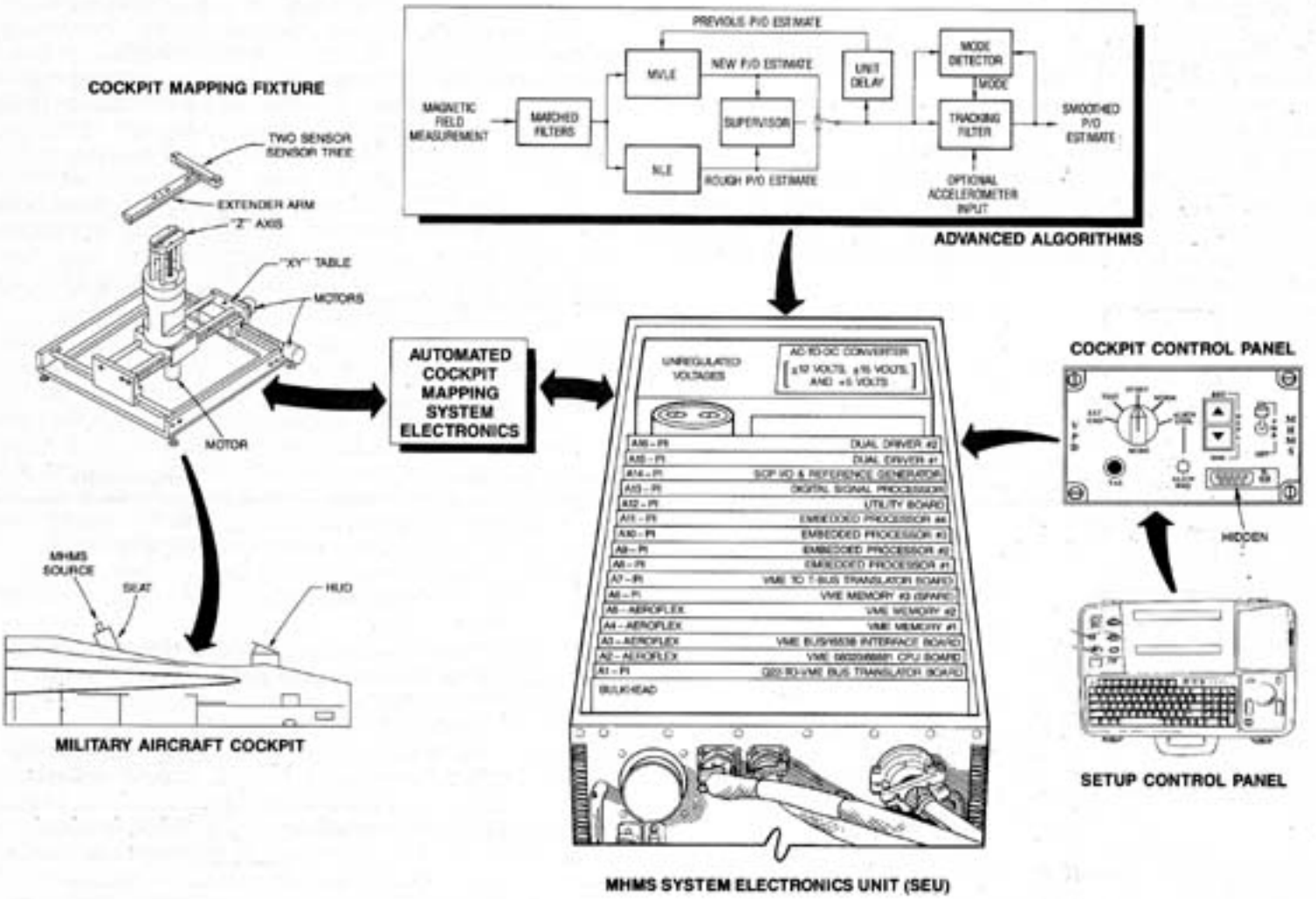

FIGURE 4
VPD MHMS System Concept

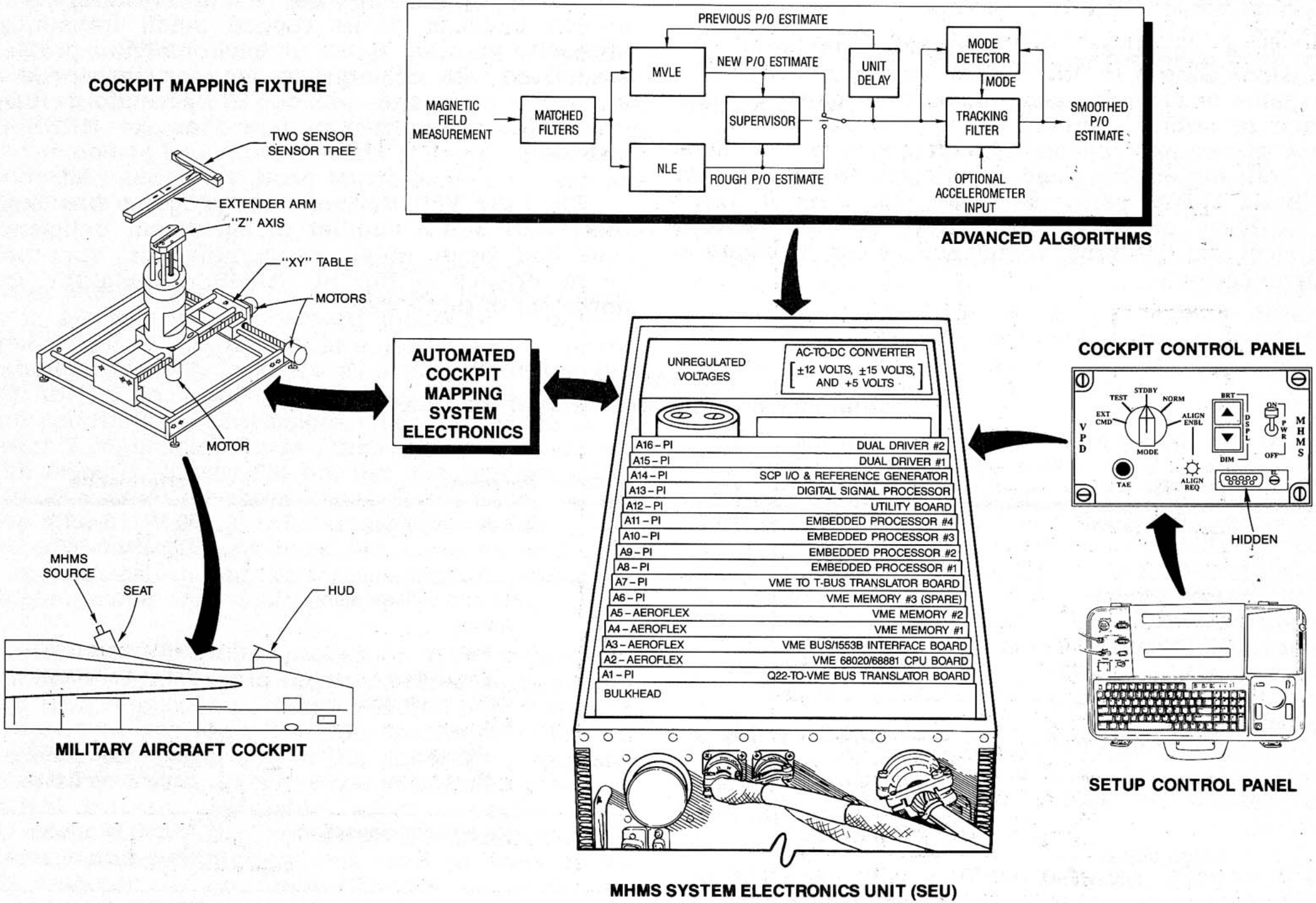

FIGURE 4
VPD MHMS System Concept

and power disruptions. Signal oversampling and a "matched filter" are used on the front end to obtain the needed signal-to-noise ratio (SNR) and to minimize head-mounted CRT interference. The hardware provides the necessary computational power and system upgrade flexibility, including optional accelerometer inputs. This flexibility permits adding tracking filter implementations to the MHMS outputs, whose programmed characteristics allow selective modification of its outputs, based upon environmental disturbances and the operator's tracking inputs. The primary purpose of the filtering is to improve operator LOS placement accuracy and to improve information extraction from the HMD.

The primary update rate for P&O tracking of a single helmet is an impressive 240 updates per second (UPS). Figure 5 indicates that as many as 2 observer heads and 4 hands can be independently tracked using separate P&O sensors. However, this maximum configuration reduces the update rate to 60 and 30 UPS for the heads and hands, respectively. Separate update cycles are needed to first sample and filter the raw field data, and then determine true P&O estimates. This reduces the data throughput rate to at least half of the maximum update rate. As shown in Figure 5, the MHMS can be "synched" to an external source or clock. This feature can be important for applications involving computer-generated imagery where obtaining equal update rates of head P&O is desirable for the display of moving objects on the HMD. A set-up control panel (SCP) can also be interfaced directly to the cockpit side of the cockpit control panel (CCP). The SCP allows built-in test functions to be accessed and system parameters modified without removing the system from the aircraft.

The MHMS system is complemented by a programmable, semi-automated mapping fixture which, during the cockpit mapping and compensation process, is connected to the actual MHMS system that will be installed in the cockpit. The mapper's computer shares data with the MHMS processor hardware. Using a predetermined system error budget, the mapper system gathers preliminary raw magnetic field data based upon a completely quantitative process for allocation of the field mapping data points. Thus, the density of the sampled cockpit field data is controlled by solutions derived directly from computations involving the actual MHMS hardware and MVLE/NLE algorithms. A similar approach is used for mapping the magnetic field conditions induced by helmet-mounted scatterers, with respect to their fixed relationship to the helmet-mounted sensor, and, then, computing the needed field compensation coefficients. Taken together, this new "systems" approach to the MHMS provides superior tracking accuracy and complements the overall quality of the VCS MMI.

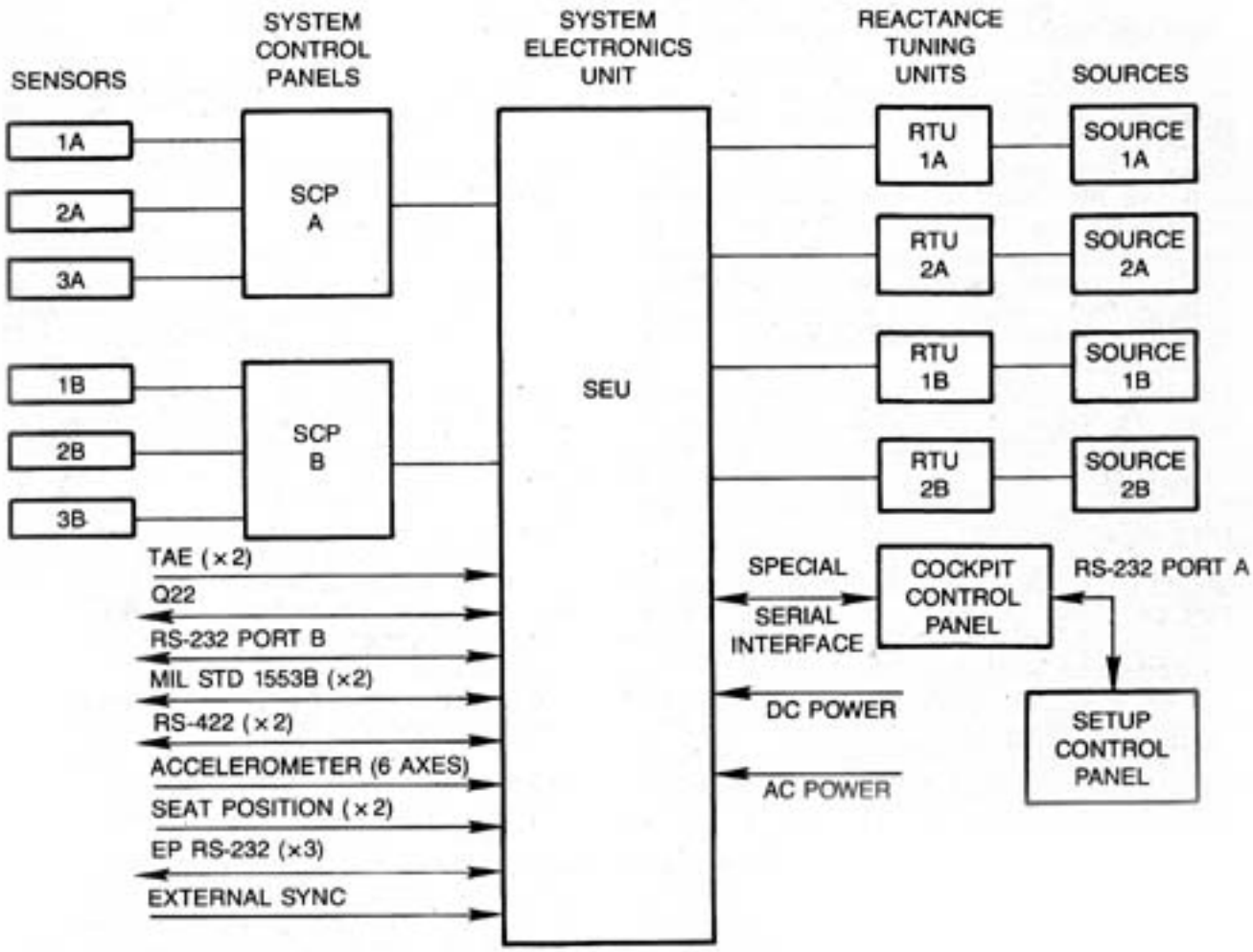

FIGURE 5
VPD MHMS Component Block Diagram

MHMS Performance: "Technology and Research-Based Requirements"

At the beginning of the VPD MHMS program, a set of performance goals was formulated based upon a programmatic requirement to demonstrate useful technology advancement and, also, the need to support research in operational aircraft environments. The most important of these were:

1. Enlarge sensor motion box to provide reliable coverage of head and hand position and orientation throughout the cockpit volume,

2. Improve static accuracy to levels approaching that of the HUD (1 to 3 milliradians) to support most weapon system interface functions,

3. Improve update rate and throughput rate to support auditory localization, as well as visual subsystem data requirements,

4. Provide a system capable of investigating techniques and equipment that enhances system and human operator immunity to external disturbances, thus, allowing the improvement or modification of VCS signal processing functions, and

5. Implement a system supporting research oriented activities that could be used in both ground-based and airborne environments.

System Concept Basis: "Establishing System Error Criteria"

Once system requirements were set down, it quickly became apparent that a new approach to the MHMS software and hardware was required. For the hardware, it was necessary to develop an affordable militarized architecture that was flexible and offered high computational rates. For the algorithms, whose characteristics would largely determine overall performance, a joint program with GMRR was initiated to identify how the data in the MHMS fields could be used to compute P&O with minimum error, and identify factors that limited the computational process (see references [04,05]). For the MHMS system, allocation of a total system error budget was made early, and a concerted effort was made to meet it, particularly because of the parallel development process used in the program.

The system error budget and design equations are based upon two basic concepts: (1) expected mean-square measurement error (EMSME) is convertible into an expected mean-square estimation error (EMSEE) through a scale factor and (2) EMSME is expressible as the root mean square (RMS) of the various error sources. Reference [03] contains a more complete development as to how this error performance was determined.

Improving MHMS System Accuracy: "Static" and "Dynamic"

The desired error performance is demanding and exceeds the performance of the standard 12-bit MHMS systems now available. The key factors helping the new system to meet this ambitious goal are:

1. Improved MHMS algorithms that embody associated analysis explicitly defining and characterizing system error sources,

2. An integrated and automated mapping fixture, and

3. MHMS hardware that includes special front-end digital signal processing hardware, improved update rate and resolution, and a slightly larger source (radiator or transmitter) size.

An adequate system solution has required a more "technically-complete" approach to the MHMS development. As a result of the early and in-depth application of applied mathematics, the minimum variance linear estimator (MVLE) algorithm was evolved and has become a key element for improved MHMS performance. The MVLE has two especially desirable properties when used with a magnetic P&O tracking system [04]: (1) it provides the most accurate estimates from noisy measurements and (2) rather than assume a free space condition that must be corrected, as other MHMS algorithms have done, it makes direct use of the magnetic-field characteristics at the sensor. It is the second property of producing a correct estimate directly from the magnetic-field conditions that allows the MHMS sensor to be tracked more accurately, even down to conducting metal surfaces. The algorithm design also enhances the incorporation of moveable scatterer compensation (for the head mounted CRTs) into the primary P&O algorithm. Oversampling of the MHMS signals and a matched-filter optimize reception of the separate and simultaneous three-axis winding signal excitation frequencies. The matched-filter can also provide attenuation of the radiated CRT deflection noise at the line rate frequency for the HMD raster imagery. The matched-filter implementation is essential to ensuring that an ~70 dB signal/noise ratio (SNR) for worst case conditions is met. The SNR is also improved by a slightly larger source, true 14-bit resolution of the magnetic fields, and distance-related gain changes in the radiated B-field strength. A whole host of signal processing refinements, beyond the scope of this paper, are used to improve P&O tracking performance, including compensation for finite transducer size effects, seat-movement compensation, and reductions in the buildup of computational errors. Because the MVLE tracks incremental changes in the magnetic fields, a higher update rate improves its stability. The operation of the MVLE is signal-dependent. It can remain stable for large step inputs of several hundred degrees/second, if followed by relatively static field changes or if fed continuous incremental inputs per update cycle that change by no more than about one to two degrees. Given the new MHMS's update rate (up to 240 updates/second), the MVLE can remain stable for head movement rates of hundreds of degrees per second. However, the performance boundary is made fuzzy because of its dependence on changes between incremental updates that are determined by head movement and system configuration-dependent update rates. Therefore, as Figure 4 shows, the software includes a supervisory process which switches the MHMS P&O solution to a NLE whenever stable solution criteria are not met. A sample of simulated MVLE tracking performance is presented in Figures 6a and 6b. The figures clearly show that the presence of fixed scatterers affects the minimum error that can be obtained, but the error

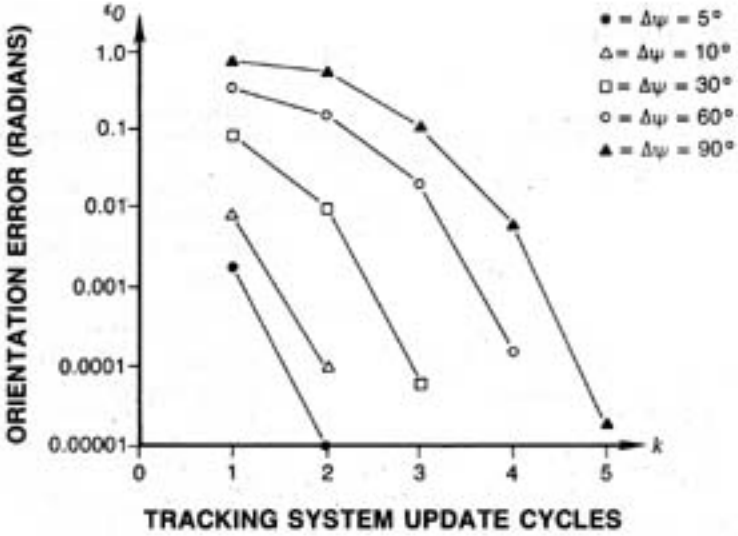

6a) Free Space Error Performance

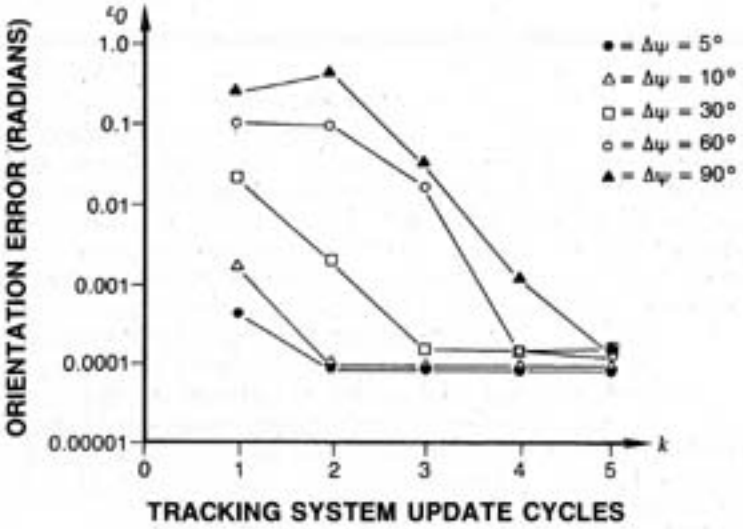

6b) Error Performance in the Presence of 2 Fixed Scatterers

FIGURE 6
Representative MVLE Orientation Tracking Performance for Free-Space and Fixed Scattering Environments

floor (0.0001 radians or 0.34 arc minutes) meets the system error requirements listed in Table 2.

Table 2 also depicts important VPD MHMS performance parameters including the expected static accuracy of the new system when the automated mapping fixture is used to determine the allocation of field measurement points from which the necessary system compensation coefficients are computed.

MHMS Integration Issues

P&O Update Rate and Resolution

The implications of the new MHMS performance for the VCS are important for both operational and test applications. Integration issues are also more subtle and dependent on the characteristics of the MHMS technology than the AHMDE, which generally adheres to standard video practices. The new system algorithms and hardware improve static accuracy to an estimated 1 or 2 milliradians within the 'HUD Box' (± 30° in azimuth and elevation), and to about 4-6 milliradians throughout the entire sensor motion box. Accuracy is also quantified better by the interactive mapping fixture design, which is an important improvement for research oriented activities. Resolution has also been improved to better than 0.4 milliradians. Resolution can be a significant parameter for head-driven display presentations where small head movements can be detected on the HMD presentation under conditions of high apparent magnification. 12-bit P&O tracking systems have been observed to cause undesirable and detectable discrete jumps in the location of the display imagery on the HMD during small head movements. 14-bit systems seem to provide enough additional resolution to make this artifact virtually undetectable. There are tradeoffs associated with the improved performance. Achieving the added SNR needed to attain an honest 14-bit system requires a larger source. The larger sources measure 1.25 inches to 1.5 inches square and weigh between 7.5 and 9 ounces. The ideal mounting location in fighter aircraft is on the cockpit canopy behind the pilot. The larger and heavier MHMS source may be too heavy for mounting in some cockpit canopies (e.g. the F-16) because birdstrike induced mechanical canopy waves are more prone to cause canopy failure with the heavier MHMS source mounted in them.

Most MHMS system P&O algorithms require at least two update cycles to obtain good convergence to accurate measured dynamic head location outputs. The new MHMS is no exception, as Figure 6 data indicates. The higher update rate reduces the convergence latency problem down to manageable levels. It also aids the throughput delay problems for computer-generated imagery systems which must place their imagery on the HMD according to the MHMS P&O updates. For applications, such as auditory localization, even higher update rates may be desired, because the ear can follow position update latencies in sound field vectors of less than one millisecond. A higher update rate also aids one area of MHMS performance that is particularly hard to quantify: system dynamic accuracy. The problem with this requirement is its measurement. Past development efforts that have investigated this problem have resulted in budgetary estimates of 3 to 4 hundred thousand dollars to produce an adequate test fixture. This is an amount that meager development budgets have not been able to handle with competing commitments of greater overall import. Perhaps a good alternative for the HMS is the achievement of higher update rates which reduce the latency between the measured and real head position and orientation and, thus, inherently improve system dynamic accuracy.

TABLE 2
Summary of Basic MHMS Performance

Item	Parameter	Performance
1	Angular coverage	
	Azimuth	±180°
	Elevation	± 90°
	Roll	±180°
2	Normal cockpit motion box coverage (can be essentially the physical limits of the cockpit)	
	X direction	±21"
	Y direction	±15"
	Z direction	± 8"
3	Static angular accuracy [line-of-sight (LOS) error for reduced angular coverage of ±70° in azimuth/elevation and ±30° roll]	
	50% circular error (CE)	<0.2° (2–3 milliradians)
	99% CE	<0.4° (6–7 milliradians)
4	Static angular accuracy (for conditions stated in 1 above)	
	50% CE	<0.3° (4–5 milliradians)
	99% CE	<0.5° (8–9 milliradians)
5	Static translational accuracy X, Y, and Z	≤0.2" plus 1% of separation distance between source and sensor
6	Resolution	
	Angular	~0.022°
	Translational	Better than 0.05"
7	Repeatability	Twice resolution limits in (6)
8	Update rate(s)	
	a) MHMS with basic tracking algorithms	240 updates/sec (U/S)
	b) Two-cockpit operation	120 (U/S)
	c) With virtual hand controller	
	1 head/1 hand	120/120 U/S
	1 head/2 hands	120/60 U/S
	2 heads/1–4 hands	60/30 U/S

System Design and the Operating Environment: Improving Pilot Confidence in VCS

Using a helmet orientation and position tracking system to direct weapons and place/stabilize imagery on the HMD, makes consistent system P&O outputs a necessity. Obtaining P&O tracking consistency for the MHMS involves two major system integration issues.

The first is where the pilot must or might place his helmet during any mission eventuality. For most VCS applications, it is desirable to have the entire head movement range under which functional display presentations are to be maintained, covered by normal MHMS operation. This viewpoint is often confirmed by experience with test pilots and the feedback that they provide concerning their experiences with VCS. This circumstance can occur in many present MHMS systems when radiator-sensor range is exceeded or unusual pilot head attitudes occur during mission activities which place the helmet mounted sensor near electrically conductive surfaces. Such artifacts are deemed to be unacceptable by most operational personnel with extensive VCS experience. As mentioned, the cockpit mapping and system compensation approach employs an automated mapping fixture. The computerized control interface between the mapper and MHMS system and its algorithms permits precise sampling of the cockpit electromagnetic field environment to ascertain that the desired error performance, cockpit environment, the system software, and operational helmet configuration are adequate. Until the development of the new MHMS, movement of the helmet sensor very near to conducting surfaces could produce wildly jumping display imagery. An undesirable solution to such problems has been to freeze LOS signals at their last known "good field" condition, but the HMD imagery as positioned by the HMS will not reflect true P&O. The new MHMS algorithms now permit the sensor P&O to be tracked down to conducting metal surfaces and permit the graceful degradation of system accuracy and resolution to 13-bits, 12-bits, etc. for conditions where the maximum full resolution source-sensor range is exceeded. Therefore, a more stringent sensor tracking requirement that favors reliability of the MHMS-controlled placement of the HMD scene contents does not now imply a new, high risk development effort. It does imply, however, a greater allocation of computational power to the MHMS function than is offered by other available variations of the MHMS, militarized or commercial.

The second major integration issue is the spatial relationships of both the other helmet components (especially those that can distort or attenuate the MHMS magnetic field) and the MHMS source (transmitter) with respect to the helmet sensor location. The major, but not necessarily the only, significant helmet-mounted scatterer is the CRT. Figure 7 illustrates the nominal location volumes of the helmet mounted CRTs for the usual binocular and monocular/biocular HMD configurations with respect to the MHMS sensor. The ideal mounting location for the MHMS is on the crown of the helmet, in part, because this location is distanced from many sources of interference, and because the ideal location for the MHMS source is to the rear of the pilot's head in the cockpit canopy or above the seat back. CRT locations 1 and 2, shown in Figure 7, can be particularly bothersome to reliable MHMS operation for head attitudes that include a directed LOS toward the side or rear of the aircraft with positive elevation angles. VCS integration planning should give consideration to such relationships and the tradeoffs they imply. In so doing, an attempt should be made to place the sensor on the helmet and the transmitter in the cockpit at positions where obscuration of the transmitter's signal (by a helmet CRT, etc.) due to head movement is unlikely or

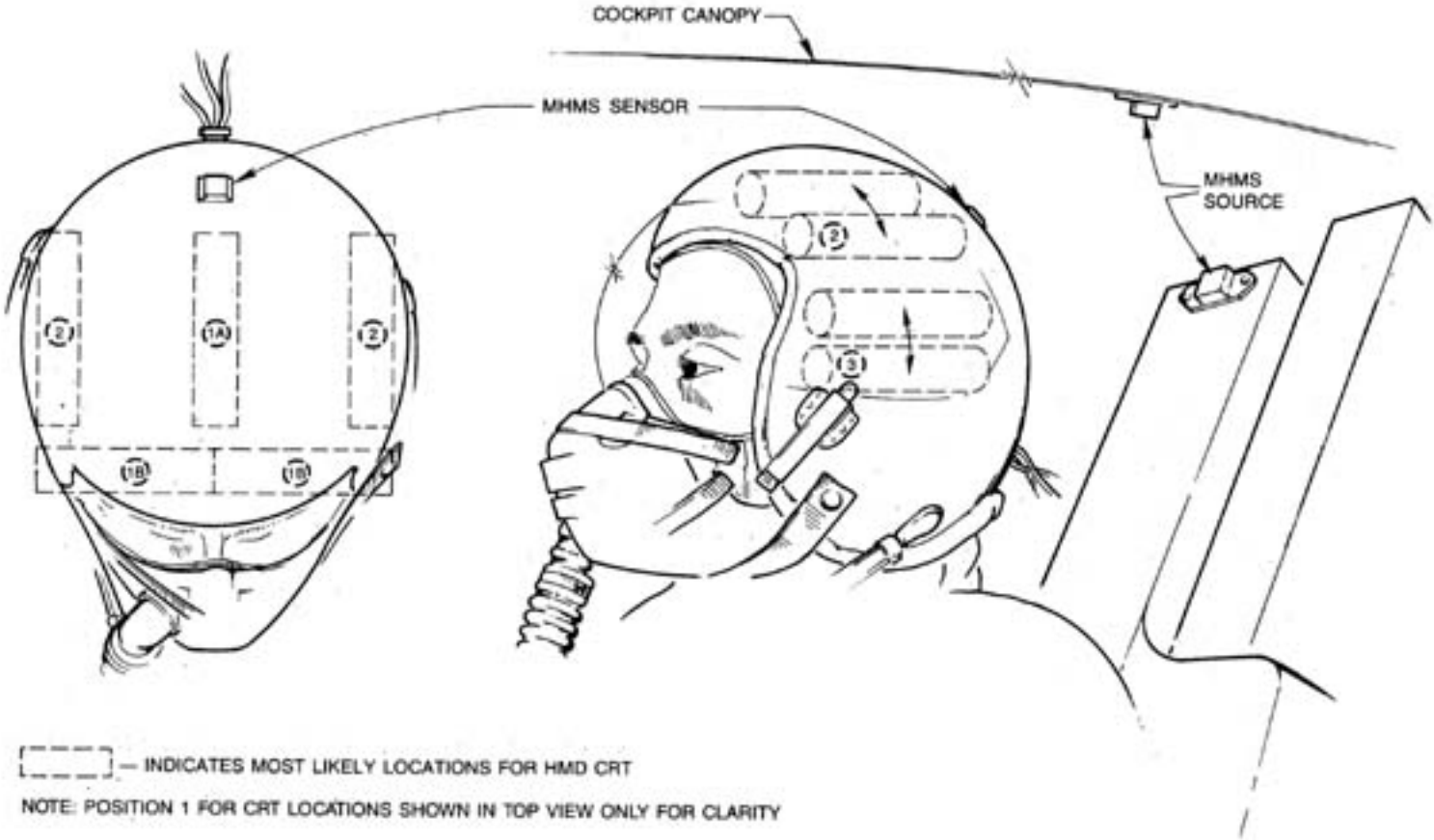

FIGURE 7
Normal Position Envelopes for Helmet-Mounted CRTs

impossible. Dynamic compensation for the movement of the head mounted CRT(s) may be critical to overall system tracking performance, especially if two CRTs are used or the mounting geometries of the CRT(s) and sensor cannot have optimum locations. A top-mounted CRT centered on the crown of the flight helmet for biocular HMD designs often poses the most serious problem.

One former approach to compensating for dynamic scatterers was to characterize the secondary field of the moveable scatterer and compensate for its effects using a dipole or multi-dipole model. This technique has not worked well, because the dipole locations are not readily determined and their scattering parameters depend on the number of dipoles used (quickly raising computational overhead) and an accurate knowledge of the location of each dipole. Recent experience with an alternate approach [05] that characterizes the scattered field as a sum of the multipole fields appears to have produced superior results in laboratory testing. In this technique, the multipole moments are linearly related to the primary magnetic field and its gradients by a set of scattering coefficients that are readily determined from sets of scattered-field measurements by linear-coefficient fitting techniques.

The effect of fixed and dynamic scatterers on MHMS operation is important enough in the design and integration of VCS that a short discussion of basic considerations is appropriate. An initial assessment of the MHMS environment helps reduce potential problems during final system integration by noting a few geometric relationships and the worst-case conditions for MHMS field distortion caused by fixed and helmet-mounted moveable scatterers. Figure 8 depicts the worst-case situation for a fixed scatterer in relation to the transmitter(source)-receiver(sensor) distance. This occurs when the sensor is directly below the source. Since amplitude for the MHMS quasi-static field is proportional to the inverse cube of distance, the worst case distortion ratio (D) is given by equation (1) where "ρ" represents distance. Using (1) and a ratio of 5.5 for ρ_2/ρ_1, one computes a distortion ratio of $1/(11 - 1)^3 = 0.001$ or 0.1 percent. A ratio of 2.82 would produce a distortion ratio of 1 percent.

$$D = (\rho_1)^3/(2\rho_2-\rho_1)^3 = 1/(2\rho_2/\rho_1 - 1)^3 \quad (1)$$

Where: $\rho_3 = 2\rho_2-\rho_1$

Work performed during the development of the VPD MHMS at AAMRL and GMRR and documented in [05] helped to characterize the field distortion due to the presence of several types of simply-shaped dynamic scatterers. These include spheres and prolate spheroids which resemble the shape of the normal cylindrical CRT. For the moveable scatterer, the ratio between scatterer-to-sensor-distance (ρ') and scatterer

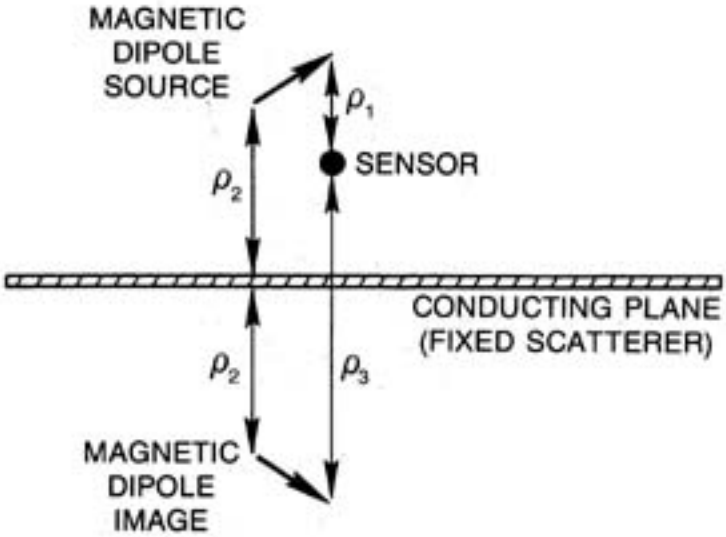

FIGURE 8
Fixed Scatterer Relationships

size ($\mathcal{L}$) becomes the dominant relationship for computing the distortion ratio. For the inverse cube relationship we now get the relationship shown in equation 2. As shown for the spherical scatterer in

$$D = (\mathcal{L} / \rho')^3 \qquad (2)$$

Figure 9, the distortion contours are simply spheres centered about the scattering sphere. For example, in Figure 9, a length of 4.64 $\mathcal{L}$ (where $\mathcal{L}$ = radius of the scattering sphere) produces a distortion ratio of 1 percent. As compared to a sphere with radius of $\mathcal{L}_r$, a prolate spheroid with semiaxis of $\mathcal{L}_1 = \mathcal{L}_r$ and $\mathcal{L}_2 = \mathcal{L}_3 = 0.2\ \mathcal{L}_r$, representing about the eccentricity of the HMD CRT, produces maximum scattering no worse than about twice that of the sphere. The point being

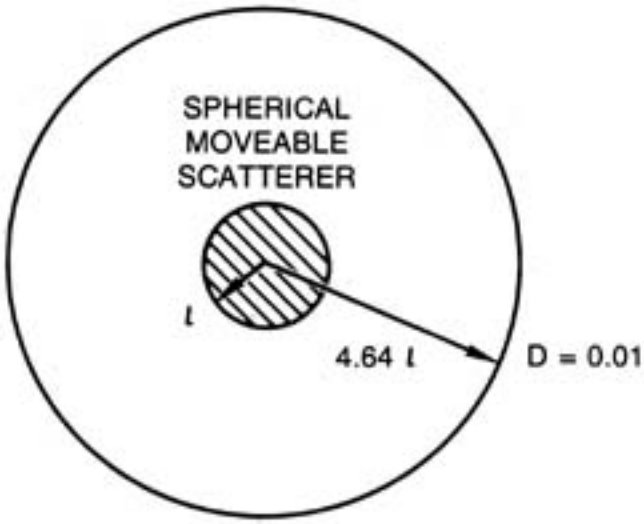

FIGURE 9
Moveable Scatterer Distortion Contours Near A Conducting Sphere

made is that the helmet system design greatly affects the method and complexity of the required dynamic compensation process in the MHMS. If the HMD design permits a lower mounting location for the CRTs, as shown for location 3, in Figure 7, then the MHMS sensor may be placed at or near the top of the helmet. Located in this manner, the CRT scatterer(s) have a much reduced probability of blocking the MHMS signal during head movement. The minimum scatterer/sensor distance ratio will also be relatively large. A biocular design, as mentioned earlier, may, with most preferred sensor mounting locations, provide an increased opportunity for the scatterer to block the source's signal to the sensor. Alternately, placing the MHMS sensor on top of the helmet near the CRT scatterer to prevent signal blockage by the scatterer will significantly reduce (in a negative manner) the scatterer-to-sensor-distance to scatterer size ratio.

It is also wise, and usually necessary, to imbed some sort of capability into the MHMS to overcome situations where the HMD CRTs will completely block the signal to the receiver until an unobstructed line-of-sight (LOS) can be reestablished with the transmitter. The only good alternative is usually to hold the MHMS P&O output data at the last good field data point until radiated field conditions return to acceptable levels.

MHMS system signal properties are also influenced significantly by the material composition and structure of the overall VCS design. Of greatest concern are materials which, because of their physical properties, severely attenuate or distort the primary magnetic fields. For example, conducting metal on the helmet, per se, does not significantly degrade the uncompensated performance of the MHMS. Rather large conducting surfaces, structures that allow magnetic field induced current loops to form, and ferromagnetic materials are the major contributors to reduced performance (i.e. greater system error). In particular, the VCS system integrator should examine its subcontractor's production techniques to ensure that unexpected problem sources will not be present. One significant problem involved aluminum shimming rings for the HMD relay lens elements which were discovered to be causing severe dynamic scattering of the MHMS fields that was hard to compensate to obtain satisfactory error performance. The solution was to place a notch in each ring to prevent formation of current loops and secondary magnetic fields. Thus, an improved system design, as represented by the VPD MHMS, and thoughtful integration can complement each other to produce a more reliable pilot-centered or operator-centered system.

Optimizing Sight and Display Utilization

In this author's opinion, optimization is always a relative concept - for one usually does the best that can be done at a given time with available resources. Among the VCS optimization issues that have resisted a major improvement are the degradation of HMD performance caused by aircraft vibration transmitted to the head/helmet, and the effects of system P&O delays or head movement artifacts on operator LOS tracking. LOS tracking can be further divided into perhaps at least seven categories or modes, which may

have differing implementations for optimal tracking filter solutions. A possible set is:

1) Pointing (at a static target),
2) Tracking (a distant moving target),
3) Close Tracking (target moving close to an observer),
4) Handoff (of LOS from one observer to another for any mode 1-3),
5) Searching (for a new target),
6) Transition (between one LOS and another), and
7) Wandering (no specific LOS objective).

Both aircraft vibration and system induced LOS transport delays for display symbology positioning can severely degrade the operator's ability to extract and/or use information presented on the HMD. As shown in Figure 4, the MHMS electronics unit contains four imbedded processor boards. One of these processor boards was intended for use in aiding the investigation of the biodynamic interference suppression (vibration) and LOS tracking issues. Figure 5 depicts accelerometer inputs that can be used as an option for receiving direct inputs of head and aircraft vibration. The use of accelerometer inputs can provide improved stabilization of the HMD image, and needs further investigation. Often, however, systems utilizing accelerometer inputs exclusively perform poorly during large rotations of the head. Stabilization of the LOS signals, as derived from the MHMS P&O updates, using adaptive filtering, is also possible. The effectiveness of such stabilization may be reduced, though, by the possible relatively large phase errors that can occur in attempting to stabilize over a 5-Hz bandwidth with samples taken at 30 or 60 Hz. The improved update rate of the VPD MHMS and the use of Kalman filters or complementary filters (actually a form of Kalman filtering) that combine measurements of head P&O with accelerometer outputs may overcome these difficulties. The VPD MHMS provides not only the capability to run such algorithms, as they could be run in any computer simulation environment, but also the capability to test them in relation to operator performance in the actual airborne environment.

The programmable flexibility of the VPD MHMS also allows the benefits of advanced cueing modes to be implemented and studied. One example is coordinate intersection cueing (CIC). In a CIC mode, physical cockpit switches, or switches imaged onto a panel mounted display, are referenced to the MHMS source's coordinate system. Utilizing the 6 DOF measurements of the MHMS, the location of these switches is constantly recomputed by the MHMS, allowing "no-hands-needed" LOS activation by the pilot with his MHMS LOS reticle. This mode effectively duplicates a portion of the oculometer function without the need to add this hardware to the helmet.

Summary

The VCS MMI represents a significant departure from the standard cockpit MMI in use today. The development approach for the major VPD systems comprising the VCS MMI, should, if properly utilized, aid the transition to this advanced cockpit interface. For both the AHMDE and MHMS, the closed-loop system implementation for installation and operation should aid both the researcher and manufacturer. The benefits for research personnel would be extremely reliable data describing the accuracy of the VCS implementation and very flexible airborne-qualified test instrumentation. The result for a potential manufacturer should be better a priori knowledge concerning interface and production issues. For example, a calibration process that is reliable and accurate enough to guarantee that the mapping process for one cockpit can apply in a labor savings manner to like configured cockpits, thus permitting the mapping of one cockpit to suffice for an entire block of similar aircraft. Whether this system approach meets expectations remains for the delivery of the production systems in 1991 and out-year testing and experience to confirm.

References and Selected Bibliography

[01] Buchroeder, R.A. and Kocian, D. F., Display System Analysis for the LHX Helicopter Application, US Air Force Armstrong Aerospace Medical Research Laboratory, Wright-Patterson AFB OH, 1989, AAMRL-TR-89-001.

[02] Kocian, D.F., Design Considerations for Virtual Panoramic Display (VPD) Helmet Systems, AGARD Symposium on The Man-Machine Interface in Tactical Aircraft Design and Combat Automation, AGARD-CP-425, July, 1988.

[03] Kocian, D. F. Visually Coupled Systems (VCS): Preparing the Engineering Research Framework, IEEE, AESS, 11th Annual Dayton, Ohio Chapter Symposium, 28 November, 1990.

[04] Raab, Frederick H., Ph.D., Algorithms for Position and Orientation Determination in Magnetic Helmet Mounted Sight System, US Air Force Armstrong Aerospace Medical Research Laboratory, Wright-Patterson AFB OH, 1982, AAMRL-TR-82-045.

[05] Raab, Frederick H., Ph.D., and Brewster, C. C., Magnetic-Multipole Technique for Moveable-Scatterer Compensation, US Air Force Armstrong Aerospace Medical Research Laboratory, Wright-Patterson AFB OH, 1988, AAMRL-TR-88-054.

[06] Sellers, John, Helmet Mounted Display Electronics for Evaluating Helmet Mounted Displays, Society for Information Display, International Digest of Technical Papers, Vol. 22, May, 1991

[07] Task, H.L., Kocian, D.F., and Brindle, J.H., Helmet Mounted Displays: Design Considerations, Advancement on Visualization Techniques, AGARDograph No. 255, October 1980.