ASC: 86-2189 Cleared 2 Nov 90

DESIGN CONSIDERATIONS for VIRTUAL PANORAMIC DISPLAY (VPD) HELMET SYSTEMS

by

Dean F. Kocian
AAMRL/HEA, Visual Display Systems Branch
Wright-Patterson AFB, Ohio 45433-6573
USA

SUMMARY

This paper describes some of the fundamental performance and design parameters that should be considered for the successful evolution and integration of a new type of helmet mounted display (HMD) system intended for use in military aircraft cockpits/simulators. It is called a virtual panoramic display (VPD). The parameters discussed include field-of-view (FOV), exit pupil, image quality, eye relief, collimation, alignment, size, weight, system integration issues, and several others. For the first time the associated helmet system is considered as an integral subsystem that must be designed to support the requirements of the HMD. Trade-offs relating to the intended VPD applications (i.e., cockpit simulators/rotary wing aircraft), HMD design and its impact on the associated image source and display electronics are discussed. Design issues and considerations are developed primarily from the viewpoint of the VPD system integrator.

INTRODUCTION

A virtual panoramic display (VPD) is a subset of helmet-mounted display systems (systems being a key word) that provides the pilot or operator with a large instantaneous field-of-view, whose displayed information has been organized both temporally and spatially to maximize the effectiveness of the man/machine interface and, therefore, maximize operational/situation awareness [05]. The VPD system concept seeks to optimize its electronic interfaces with the aircraft or simulator system and the human's cognitive and sensory systems. The concept becomes an application-specific design problem involving not only the VPD hardware itself, but the design and operational specifications of all other hardware subsystems with which it must be interfaced. In this paper, discussion will include only the VPD visual subsystem hardware whose major components are outlined by the heavy dotted line in Figure 1.

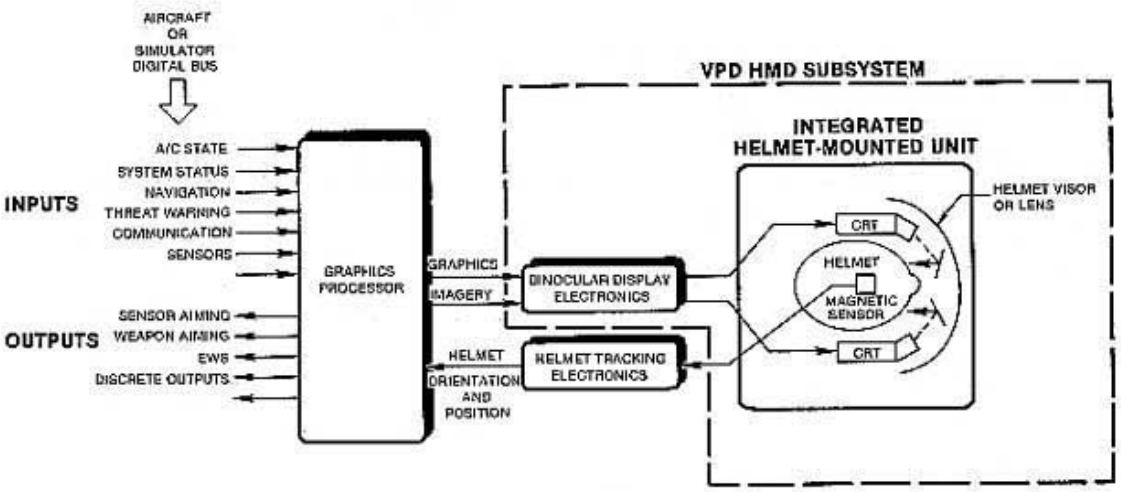

FIGURE 1
GENERIC VPD SYSTEM HARDWARE BLOCK DIAGRAM

The VPD visual subsystem includes a binocular display whose visual fields are either fully or partially overlapped, permitting, if desired, the presentation of stereoscopic images. The binocular optics are driven by miniature cathode-ray-tubes (CRTs) of an advanced design. The optics and CRTs are integrated into a custom helmet system. The CRTs are interfaced to specially designed analog helmet-mounted display electronics which "tailor" the displayed information to the requirements of both the optical and CRT design. The analog display electronics accepts inputs from both external system sensors and computer-generated graphics systems, as well as a VPD graphics processor that supplies application specific, customized, interactive symbology and graphics. The VPD graphics processor may or may not be present in a given VPD system configuration. Because the graphics processor's impact on the helmet system components is minimal, its functions will not be discussed further.

As shown in Figure 2, the head mounted CRTs must image their visual information through a set of relay optics, which may use fiber optics and/or conventional refractive elements/prisms/mirrors. A combiner or combiner/beamsplitter arrangement that may or may not be part of the helmet visor, reflects light from the CRT and transmits the outside scene. The CRTs and optics are part of an integrated helmet system (IHS) that maximizes optical system stability/functionality on the head, minimizes modifications to the helmet/head weight and center-of-gravity (CG), and protects the wearer from

hostile ambient environments. To accomplish these functions, the IHS design must use advanced materials and structures, and optimize adjustment and alignment hardware and earphone/microphone/oxygen mask components.

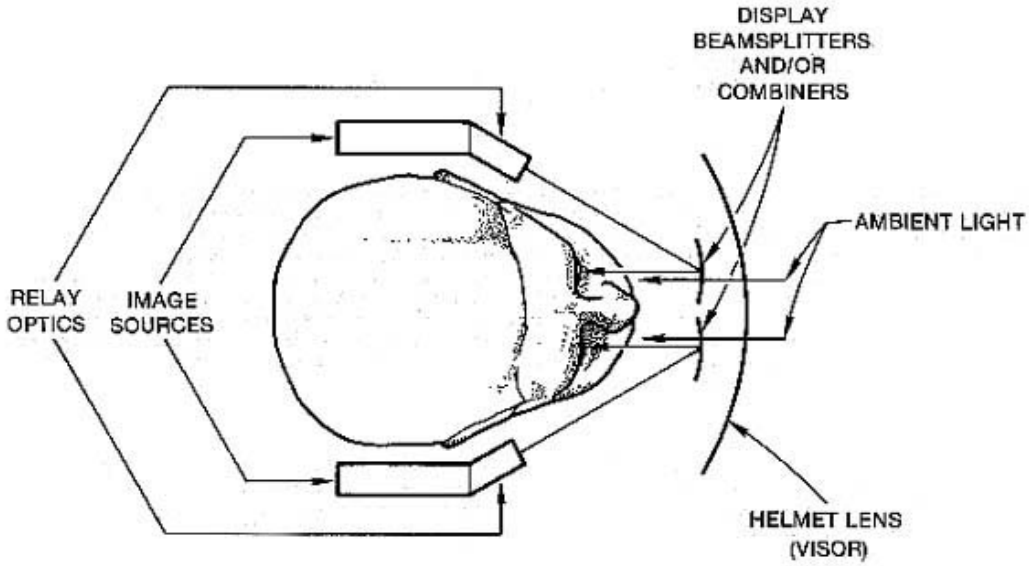

FIGURE 2
VPD HEAD/VISUAL SYSTEM RELATIONSHIPS

This paper is concerned primarily with simulator and rotary wing aircraft applications, and therefore, the breadth of discussion is somewhat specialized, although much can be inferred concerning the design of such systems for other types of aircraft. Before discussing design considerations, it is worth noting why a binocular head mounted display system was selected, instead of a cockpit mounted system, where weight/size limitations are not nearly as severe. As Figure 3 shows, there are a number of design alternatives for a wide FOV cockpit display system. A major goal of the VPD was to maximize situation awareness regardless of the operator's line-of-sight (LOS). This can be accomplished either with a reduced instantaneous FOV display that is head mounted and updated rapidly, based upon head orientation and position, or with an extremely large instantaneous FOV display that is cockpit-mounted.

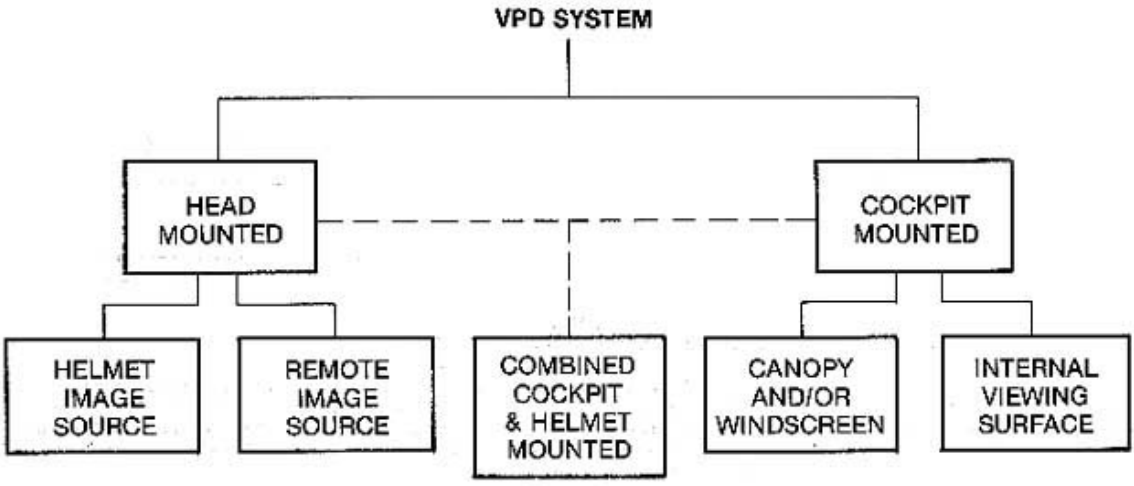

FIGURE 3
VPD DESIGN ALTERNATIVES

The choice between these major design alternatives was limited by a number of performance and technology issues. During the early design stages of the VPD program, it was decided that stereoscopic cues (using visual disparity between the two eyes) might aid the operator in ordering the relative importance of critical display information. From either a cost or performance viewpoint, current technology does not permit construction of either a cockpit-mounted or a combination cockpit/head mounted system providing the above features, therefore these were eliminated from consideration. Further, a wide FOV head-mounted display system utilizing a remote image source, coupled to the head,

using either refractive or fiber optic image conduits, suffers from a number of severe design problems, including reduced display resolution/contrast, the possibility of excessively rigid and heavy optical conduits between the head and cockpit, and stray light. Therefore, a display configuration including head mounted optics and image sources is the only alternative considered here. The reader should also note that, for the remainder of this paper, the term helmet mounted display (HMD) will be used interchangeably with VPD when referring to the helmet mounted components.

VPD DESIGN CONSIDERATIONS

OPTICS

Textbooks and engineering handbooks list many design parameters and attempt to specify and organize design parameters associated with optical systems, including helmet mounted displays (HMDs). Table 1 depicts a representative list of parameters and generalized numerical figures-of-merit (FOM) for each parameter. However, HMD design is tightly coupled to the intended application, and the use of a generalized table of parameter values or generalized design approach will not usually lead to satisfactory results. The relevant technical literature also provides scant help, and there are many large gaps in applied research that, if available, might provide for better organization of the design approach. One must, then, gather as much information as possible about the intended application and system interfaces, and hope that the available technology will support the development of an adequate design.

TABLE I
HMD OPTICAL SYSTEM DESIGN PARAMETERS

QUANTITY	TYPICAL RANGE	TOLERANCE
FIELD-OF-VIEW (INSTANTANEOUS)	70° TO 120° HOR x 30° TO 60° VER	NA
PUPIL SIZE		
HELMET MOUNTED	10 TO 23 MM	±1
EYE RELIEF		
HELMET MOUNTED	35 TO 45 MM	±3
FOCAL LENGTH	10 TO 30 MM	NA
f-NUMBER	0.7 TO 2.0	±.2
CONTRAST RATIO (APPARENT)	0.2 TO 0.80	±0.1
DISTORTION	0.2 TO 5%	±1
ASTIGMATISM	0.1 TO 1 DIOPTER	±.1
CHROMATIC ABERRATION	1 TO 6 ARC MIN	±1
COLOR	B/W TO FULL COLOR	NA
CONVERGENCE	1 TO 30 ARC MIN	±1
DIVERGENCE	1 TO 3 ARC MIN	±1
DIPVERGENCE	1 TO 15 ARC MIN	±3
DISPLAY REFRESH	60 TO 240 FIELDS/SEC	NA

To proceed with the necessary system analysis, which organizes the relationship of the available technology to the requirements of a specific application, one must arrange the parameters listed in Table 1 in order of importance. Due to the lack of definitive guidelines, this ordering is often based upon experience with current similar systems. However, the choices are complex, because of the various possibilities of constraining the types of displayed information for a given set of environmental conditions, and then mixing/matching display components to support those constraints. An example of such a scenario, of which there are many, is as follows:

a) Require that, during the high ambient luminance of daylight VPD operation, the display be limited to portraying vector graphic stroke information. It can be refreshed at higher rates and at wider line widths than raster information, to obtain maximum luminance contrast. This stroke-written information is then overlayed on the ambient scene background using a see-through display combiner.

b) During night or low ambient luminance conditions, permit the display of sensor or computer generated raster information with adequate contrast at lower maximum luminance levels. The normal ambient scene would then be replaced with a sensor-produced reproduction.

The underlying issue of this example is that display contrast, and therefore, the human operator's ability to see/use the information being delivered to him either day or night can be considered as one choice for the most important design parameter. This contrast parameter, then, drives all others in system designs that are ultimately evolved and built.

Figure 4 depicts the principle design categories of optical systems that might be exploited to implement a collimated optical design suitable for use in a VPD. These categories are delineated by the system's primary basic operating principle, realizing that a particular design will combine more

than one principle to maximize performance. For the VPD systems covered in this paper, only system types 1 through 4 were finally considered for hardware implementation.

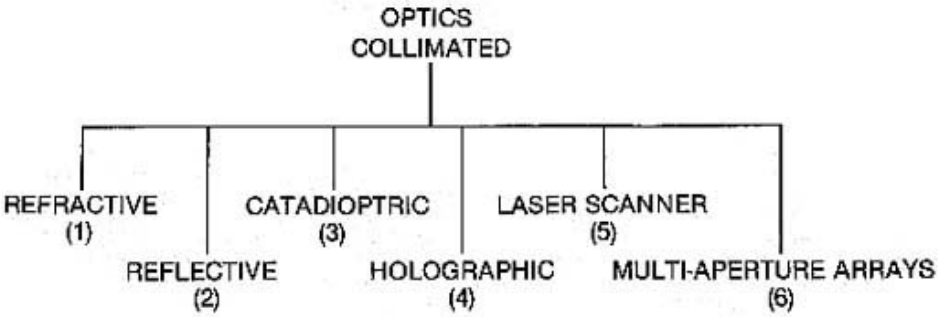

FIGURE 4
MAJOR DESIGN ALTERNATIVES FOR COLLIMATED HMDs

The design process is extensively modified, however, by the display hardware system's operating modalities. These might range from a system that must perform throughout the range of ambient conditions, to a design that will permit alteration of some of its components to match its performance to the extremes of the operating environment. Two separate designs, meant to accommodate separate portions of the environmental parameter ranges might also be reasonable. Given the many varied operational configurations for the VPD, only the more significant configurations and their associated performance are discussed in this paper.

Table 2 lists the systems and approximate values for some of the more important characteristics of each of the VPD HMD optical designs, for which working helmet system breadboards were fabricated. System 1 using a special version of the Farrand Pancake Window, employs a unique combiner design to obtain extremely large instantaneous FOVs, albeit at the extreme sacrifice of light transmission efficiency. Systems 2 and 3 are catadioptric systems using a combiner/beamsplitter combination to obtain large FOVs with reduced weight and improved, but still low, light transmission efficiency. Systems 4 and 5 are essentially refractive optical systems, using either a holographic or aspheric combiner mirror, that can provide very good light transmission efficiency, but with increased weight for FOVs comparable to systems 2 and 3. This summary is presented here so that the reader may be familiar with and reference this table as the VPD design considerations are enumerated and explained throughout the remainder of this paper.

TABLE 2
VPD HMD OPTICAL SYSTEM CHARACTERISTICS SUMMARY

CHARACTERISTICS	SYSTEM 1 FARRAND PANCAKE WINDOW	SYSTEM 2 O.D.S. CATA-DIOPTRIC	SYSTEM 3 FARRAND DUAL MIRROR	SYSTEM 4 HUGHES HOLO-GRAPHIC	SYSTEM 5 FARRAND OFF-APERTURE
EXIT PUPIL (mm)	19	21	15	15H × 10V	17/15
MONO. FOV (DEG)	80H × 60V	53H × 40V	60H × 45V	60H × 30V	50H × 37.5V
TOTAL HOR. FOV (DEG)	120	76	90	80	70
OVERLAP (DEG)	40	30	30	40	30
EYE RELIEF (mm)	39	72	32	90	60
POLYCHROMATIC	NO	NO	YES	NO	NO
CRT TO EYE TRANSMISSION	$0.01C_r$	$0.25C_r$	$0.06C_r$	$0.85C_r$	$0.9C_r$
SEE-THROUGH TRANSMISSION	$0.08C_t$	$0.5C_t$	$0.5C_t$	C_t	C_t
APPROX. WEIGHT OF OPTICS ASSEM. (gm)	490/LEG	250/LEG	210/LEG	350/LEG	460/ LEG
INPUT FORMAT HOR. (mm)	19	16	19	19	16
EFL (mm)	13.6	16.9	18.1	18.1	17.2

C_r = COMBINER REFLECTANCE

C_t = COMBINER TRANSMISSION

SIZE OF FIELD-OF-VIEW (FOV)

Selecting this parameter is often the single most important decision that the system designer or integrator must make. It can have a major impact on the maximum obtainable display combiner contrast

for a desired ambient transmission condition. Large FOVs mean more head-supported weight, and unacceptable modification of the military headgear center-of-gravity (CG), less light transmission efficiency from the image-source-to-eye (ISTE), and, ultimately, more severe performance requirements for the image source and its associated display electronics. Designers must usually place greatest weight on the primary application for the system. If the display system is intended for ground-based use in simulators or other similar functions, then the designer may opt for the largest practical FOV. Large FOVs create a panoramic visual input and a feeling of being immersed in the environment or situation being depicted. However, operational field use, particularly military cockpits, places a premium on low weight, compactness, maintenance of vision to the ambient background under all head movement and aircraft acceleration conditions, usable contrast for both the displayed and ambient visual stimulus, and survivability in hostile environments. These considerations drive HMD designs toward smaller FOVs.

Figure 5 depicts the total instantaneous FOV for the human binocular visual system, over which the instantaneous display FOV for one of the largest binocular HMDs ever built, has been drawn. It is immediately apparent that the instantaneous display FOV (120 degrees horizontal by 60 degrees vertical) is much smaller than that for unaided eyes, yet the display system needed to achieve such performance is already too heavy for general use in operational rotary wing aircraft. It also suffers from very low ISTE transmission efficiency, and thus either very poor see-through capability, and/or very low CRT contrast. In additional, the monoculars have been turned out, allowing only the overlapping central forty degrees of horizontal FOV to be seen by both eyes. This places severe constraints on both the use of the optical design [01,20] and image source performance [18].

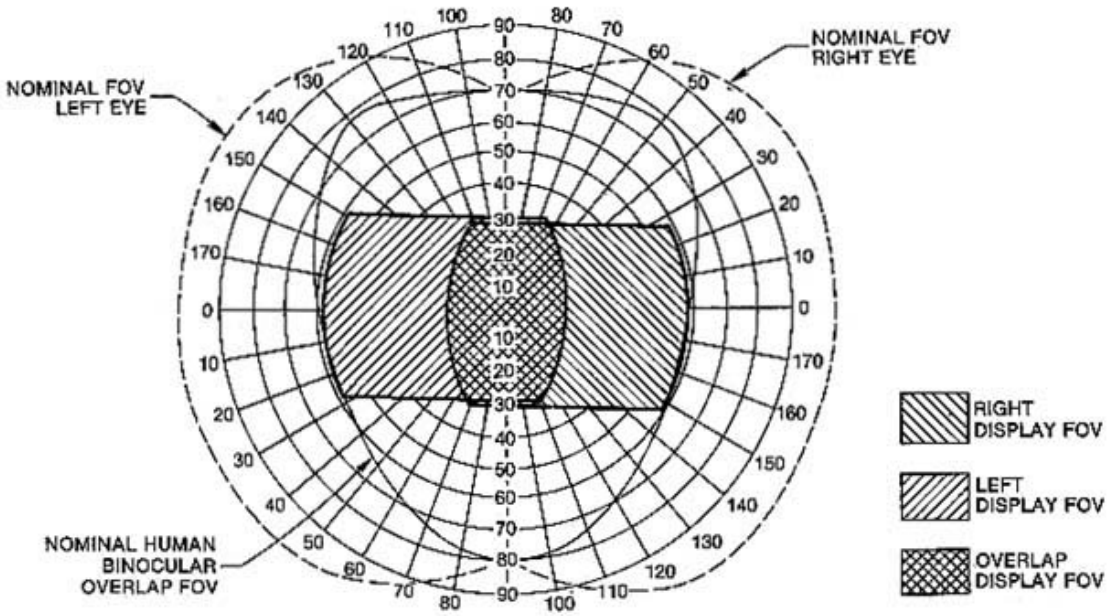

FIGURE 5
RELATIONSHIP OF HMD/EYE FOV

Binocular optical designs, particularly those employing partial overlap of their monocular FOVs, demand compatible mapping schemes for the display system's resolution elements across their angular FOVs [20]. For VFD optical designs, this usually means that F-theta mapping is the preferred mapping scheme (where the angular distribution of resolution elements becomes uniform), rather than F-tangent theta or even F-sine theta mapping (where there are excess angular resolution elements at the edges of the field). For partially overlapped systems, F-theta mapping offers the only practical solution to matching resolution elements for the same object at the edge of one eye/display monocular field to those that will be at an alternate, interior location to the field for the other eye/display monocular viewing the same object. F-theta mapping also eases the difficulty of the optical design process, allowing larger exit pupil sizes to be obtained for a given FOV [02,03]. If a full overlap condition is used, it might be desirable to introduce spline distortion. For this type of mapping, more of the resolution elements are located in the center of the display FOV than on the edge, thus approximating more closely, the foveal/peripheral topology of the eye's resolution.

For the conditions shown in Figure 5, the inboard -40 degree off-axis location for the right eye monocular, represents the 0.0 degree location on the left eye monocular. The implication of this fact for the image source, is that off-axis performance must be very similar to on-axis performance, as the central viewing portion of the display represents an off-center viewing location on the CRT, as shown in Figure 6. Further, to properly align the display formats for the eyes, as well as compensate for residual optical distortion, the CRT image source, must have its imagery predistorted to obtain proper perspective and overlay of the left and right eye display images. This is one reason why CRTs are the image source of choice over solid state image sources, because their resolution can be altered or mapped and is not constrained to the fixed patterns, positions and sizes of solid state image source

resolution elements. Display resolution and addressability issues relating to the use of HMDs in vibrating environments, may also be used as part of the total system analysis, but these considerations play a much more important role in vertical FOV selection.

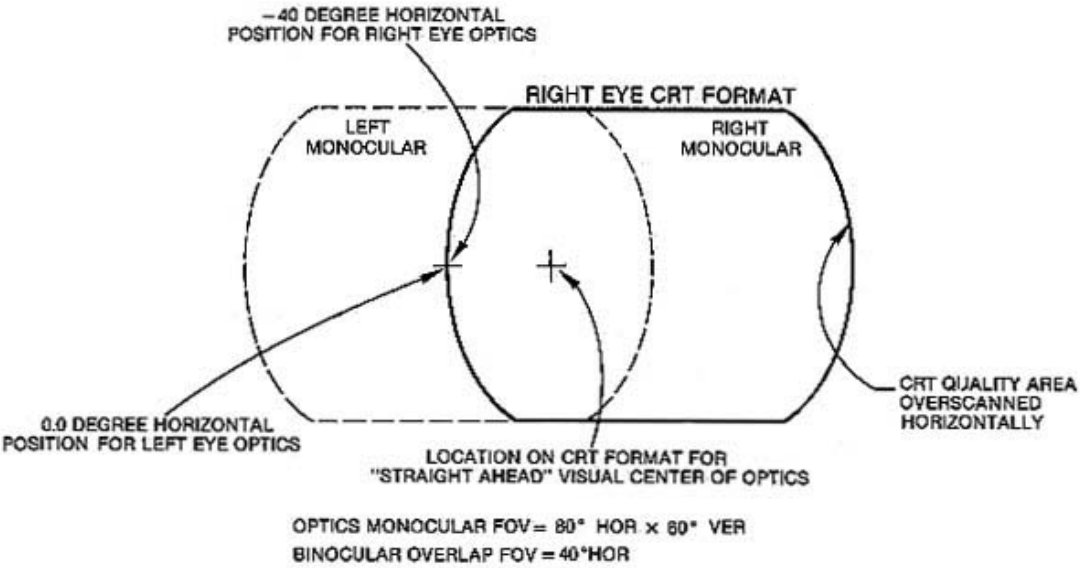

FIGURE 6
CRT FORMAT FOR PARTIALLY OVERLAPPED WIDE FOV OPTICAL DESIGN

Another important circumstance, affecting FOV selection, is the frequently levied requirement to have the sensor's FOV displayed in a direct 1-1 mapping on the HMD FOV. An example, is a FLIR system with a 50 degree horizontal by 37.5 degree vertical FOV, which must have the same apparent FOV when presented on the HMD. A requirement of this type for a panel mounted presentation would clearly be waived, because the resulting cockpit mounted display would be unacceptably large. Such a design requirement is feasible for the HMD which can have an angular subtense to the eye (apparent FOV) this large [22]. Further, if the display of more than one sensor input is required, and their associated FOVs are quite different, but their scan formats are similar, as is usually the case, then a primary sensor (normally the one used for pilotage tasks) must be chosen. The display FOV is then selected to accommodate 1-1 mapping of the primary sensor's FOV. Display magnification (or minification) must usually be accepted in analog systems, for the display of other sensors' information, because the dynamic range of the image source cannot usually support 1-1 mapping of all sensor presentations.

Having accepted this criteria, one must determine its impact. Setting aside, for the moment, sensor/display system design issues, the major design considerations become the scanning format, the number of pixel elements spread over the HMD FOV, and the scan format/pixel rate capability of the image source. A hypothetical set of sensor/HMD conditions is depicted in Figures 7a and 7b. In this example, a 4:3 aspect, 50 x 37.5 degree sensor FOV, with 750 visible scan lines and approximately square pixels, is to be presented using a 1-1 mapping of sensor-to-display resolution elements on the HMD. Assuming nighttime utilization of this sensor format and a see-through combiner, then the image source can be run at modest luminance conditions. For these conditions miniature CRTs can achieve 500 cycle (1000 pixels) per display width. Since the example sensor is providing 1000 pixels per line for simultaneous display, its format and the capabilities of the CRT image source dictate the mapping of resolution elements and ultimately the conditions for maximum HMD FOV. The two example conditions are diagrammed in Figure 7.

For the conditions shown in both 7a and 7b, the mapping of resolution elements reflects that of the sensor, while the overlap condition and the total number of sensor pixels displayed by the right and left eye image sources, has been changed to achieve different binocular horizontal FOVs for the HMD. Area ABCD for both figures indicates the entire binocular FOV that the CRT's addressability/resolution performance can support, given the requirement for 1-1 mapping of the sensor FOV onto the HMD FOV. Area WXYZ represents possible overlap conditions that the HMD CRTs can support for the given total sensor resolution and the total/overlap FOVs for the HMD. Areas RWZU and XSTY represent the remainder of the sensor presentation, which can be seen by only the right or left eye. Areas ABUD and SBCT represent the remaining display FOV, which the CRT's resolution/addressability performance can support for the stated drive conditions.

In those portions of the instantaneous display FOV, where sensor information is not displayed, additional peripheral motion/reference cues, such as artificial horizon lines, heading tapes, etc., might be drawn during the video vertical retrace interval, if vector graphic stroke symbology capability is present. Which FOV condition is designed into the HMD is application-dependent, although the preponderance of the sparse human factors data on this topic seems to indicate that maximum performance benefits occur at 50-60 degrees, increasing at a much reduced rate for still larger FOVs [13].

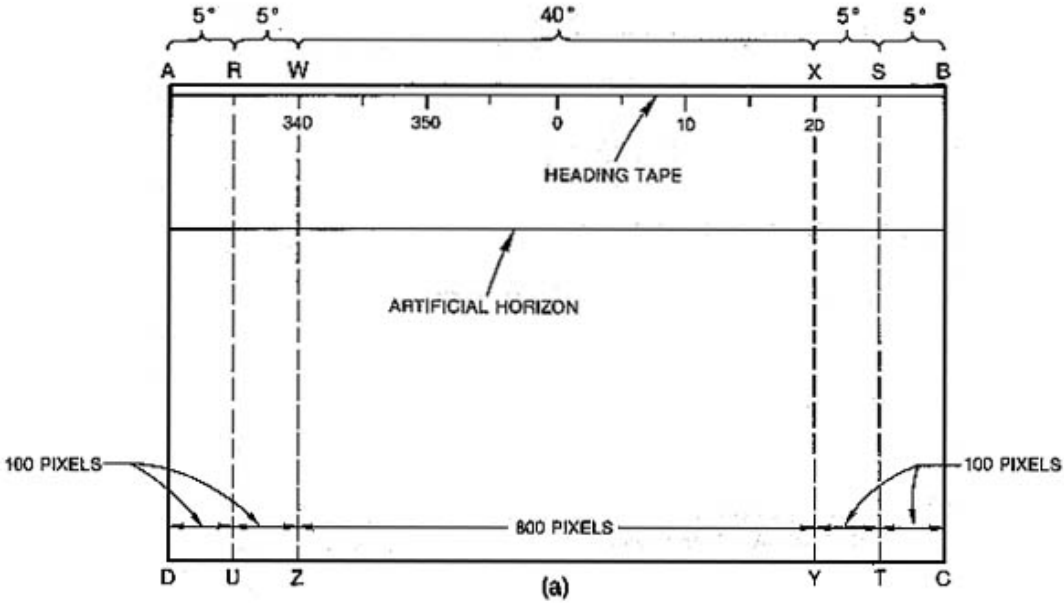

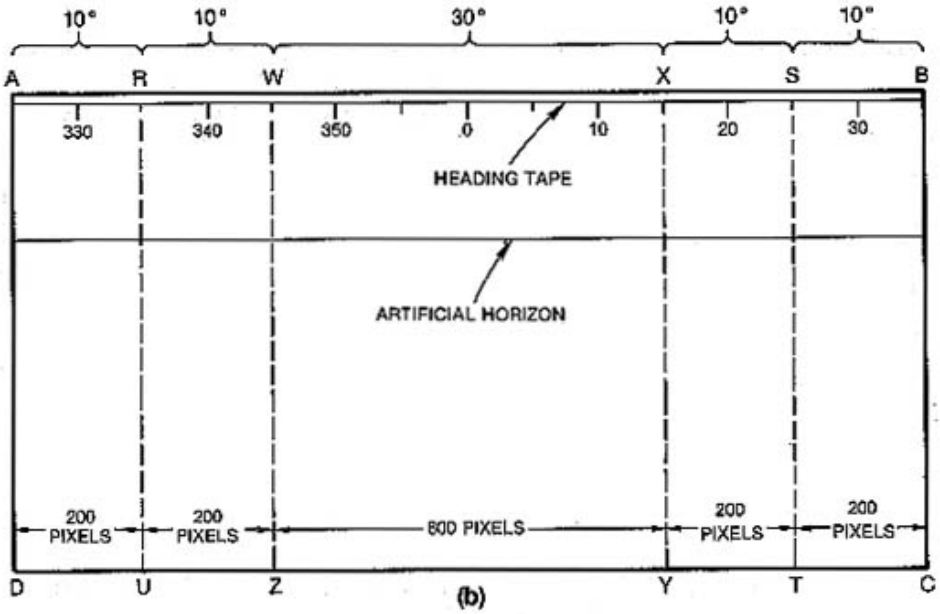

FIGURE 7
SCAN FORMAT RELATIONSHIPS FOR HYPOTHETICAL SENSOR/HMD COMBINATION

A complementary approach to establishing horizontal FOV allowing direct analytical calculation is to base the FOV determination on the overall system resolution [16]. The relationship shown in equation 1, relates resolution performance of the miniature CRT image source and the addressable resolution elements available from a given imaging sensor. These relationships may be combined to calculate the desired horizontal FOV for 1-1 mapping of the sensor FOV on the HMD. Using equation 1 and the assumed CRT/sensor performance, the desired horizontal FOV of the sensor display is 50 degrees.

Completing the determination of the maximum display binocular FOV, then reduces to computing the amount of binocular overlap that is attainable. This can be computed using the relationship shown in equation 2 [16]. Using equation 2, one computes an overlap FOV of 40 degrees. The computed horizontal and overlap FOV conditions, using both relationships, conveniently results in a format very similar to that diagrammed in Figure 7a. Of course, a mixture of the two approaches and widely dissimilar system conditions, might be combined to yield significantly different results.

$$\text{HOR FOV (DEG)} = \frac{\text{CRT FORMAT SIZE (mm)} \times \text{CRT RESOLUTION (lp/mm)}}{\text{17.5 (mrad/DEG)} \times \text{SENSOR RESOLUTION (lp/mrad)}} \qquad (1)$$

WHERE: ASSUMED CRT SPOT SIZE = 19.0 MICRONS (0.019 MILLIMETERS) OR 26 LINE PAIRS PER MILLIMETER (lp/mm)

ASSUMED CRT FORMAT SIZE = 19.0 MILLIMETERS

ASSUMED SENSOR RESOLUTION = 0.57 LINE PAIRS/MILLIRADIAN (lp/mrad)

$$\text{BINOCULAR FOV OVERLAP (DEG)} = 2 \times \text{ARCTAN} \frac{\text{EYE SEPARATION (mm)}}{2 \times \text{EYE RELIEF (mm)}} \qquad (2)$$

WHERE: NOMINAL EYE SEPARATION = 65 MILLIMETERS (mm) GIVEN 58-72 (mm) OF NOMINAL ADJUSTMENT

Having an approach for determining the vertical FOV is also important, especially since human anatomical factors make vertical FOV more difficult to obtain for pupil-forming HMD systems [01]. Nominally, the monocular FOV will have a 4:3 aspect ratio, whose vertical FOV will be determined by its horizontal FOV and overlap condition, even though the total binocular presentation will differ significantly from such an aspect ratio. However, it is important to consider certain other closely related technical factors whose origins are partially in the psychovisual domain and partially in the system designer's domain. The psychovisual considerations pertain most importantly to the required size of the subtended angle of display resolution elements to the eye when such imagery is viewed in a vibrating environment [06]. The basic assumption is that the vertical vibration component (normally having an orientation approximately perpendicular to the HMD scan lines), is the largest and most important component [06]. Here, the literature relating to the viewing of HMDs, during vibration suggests that scan lines should subtend an angle to the eye of 2 to 4 arc minutes. This statement must be viewed with caution, since observer angular resolution is dependent on a number of interrelated factors, such as display luminance and contrast which are not always specified with the data. In addition, display operating conditions normally require that CRT scan line width be adjusted so that the scan line structure is not visible. However, sufficient dynamic range should be permitted between the minimum and maximum luminance levels, such that usable contrast is maintained between adjacent pixels imaged at different luminance levels on adjacent scan lines. To accomplish this goal, the display system designer needs to establish an acceptable scan line merge condition as shown in Figure 8. The merge condition selected should allow a reasonable tradeoff of scan structure contrast and vibration induced artifacts which affect visibility of the scanned image.

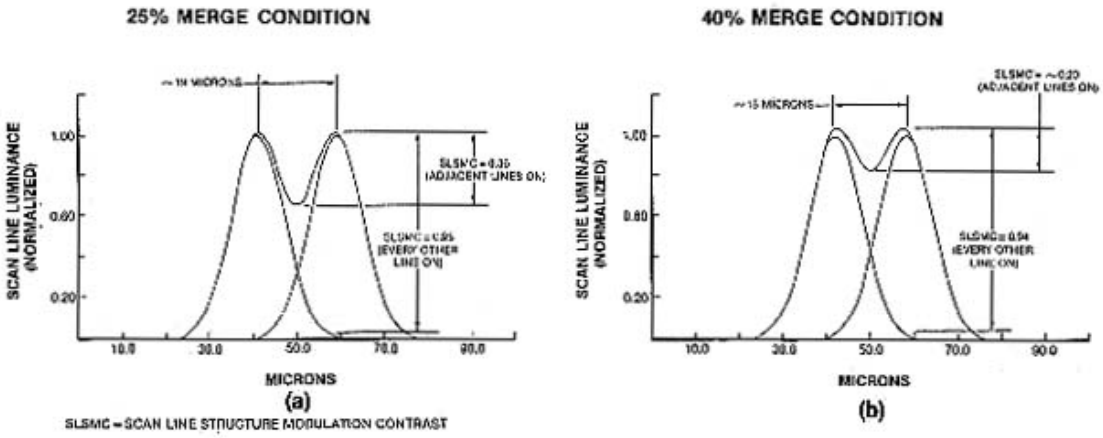

FIGURE 8
IMPACT OF MERGE POINT SELECTION FOR ADJACENT SCAN LINES

The CRT beam width conditions depicted are 12 - 14 microns at the 50 percent response point. At night, display of sensor imagery at this condition is easily supported by current miniature CRTs. Given the previous example condition of 750 visible scan lines, the distance between scan lines has been adjusted to 18 - 19 microns. This allows scan lines to subtend about 3 arc minutes of visual angle for the 37.5 degree vertical FOV of the example HMD, which falls right between the 2 - 4 arc

minute requirement suggested in the literature. Ideal gaussian response is portrayed, although, for some miniature CRTs, the tails of each spot profile may, at certain CRT drive conditions, extend out to greater distances than indicated here [08]. When adjusting CRT performance and HMD FOV to match or preserve most of the initial sensor performance, the designer usually wants to insure that the scan line widths and merge conditions are adjusted to achieve minimum scan line structure modulation contrast (SLSMC), when adjacent pixels on adjacent scan lines are at peak luminance. Conversely, maximum modulation contrast is desired between adjacent scan lines, when every other scan line is at peak luminance levels and the adjacent pixels on adjacent scan lines are at their minimum luminance level. These relationships are shown, for two separate merge conditions in Figures 8a and 8b. A reasonable design procedure is to select a FOV and merge condition where, with adjacent scan lines at full luminance levels, the SLSMC is kept below the human operator's visual demand threshold for the modulation contrast/resolution conditions obtainable from the system [see reference 23, (Figure 29)]. It should be obvious that the 40 percent merge condition represented by Figure 8 comes closest to meeting the stated criteria.

Finally, something must be said about attempting to predict the relationship between total anticipated weight for the HMD optics and FOV. One predictor, sometimes employed for this purpose, is the Lagrange invariant [02] given by equation 3. It expresses a relationship for a constant level of

$$\text{LAGRANGE INVARIANT} = Q = (\text{EXIT PUPIL SIZE}/2)(\text{FIELD ANGLE}/2) \qquad (3)$$

complexity, as FOV is reduced from some defined maximum, to obtain an estimate of the reduction in the complexity of the number of HMD optical elements needed in a specific design. However, many other factors affect this relationship, such as the basic optical design, inclusion of polychromatic versus monochromatic performance, image source format size, and materials, used in the design and fabrication of an HMD. Thus, any useful general purpose relationship is difficult to formulate, although, for a specific design restrained to the same conditions, equation 3 can provide useful predictive benchmarks.

DISPLAY OVERLAP FOV

Among persons involved in the use and development of binocular HMD systems there is much controversy about the amount of display overlap to use between the monoculars. Figure 5 depicts a 40 degree overlap condition for monoculars, with an 80 degree horizontal FOV, or a 50 percent overlap condition. The approximate theoretical maximum for the eyes is 60 degrees. This condition might be obtained with certain HMD designs if the total FOV, exit pupil, and eye relief conditions were optimized to support it. However, helmet slippage on the head, the requirement for eyeglass compatibity, and therefore greater eye relief, etc. make it difficult to obtain. Experience with the Farrand Pancake Window simulator display system developed for the Visually Coupled Airborne System Simulator (VCASS) facility, which can be adjusted for fixed overlap conditions of 20, 40, and 60 degrees, has provided subjective indications that a display system with more overlap provides a more pleasing panoramic display. Recent, but not yet published experiments conducted by the Army Night Vision Laboratory with narrower FOV HMDs seem to suggest similar findings. However, no definitive study exists on this topic. As a minimum guideline, it can be stated that, with narrow FOV systems (those with monoculars having a horizontal FOV less than or equal to 40 degrees), a full overlap condition is desirable and, for larger FOV HMDs at least 30, and probably 40 degrees of overlap is desirable.

EXIT PUPIL SIZE

The exit pupil of an optical system that has one, is a disc to which all of the light from the system converges and from which it diverges, all of the light available to the eye. When the eye pupil is entirely within the exit pupil all portions of the HMD FOV may be viewed instantaneously and at the maximum brightness that the system can provide. The definitions one usually reads in optical texts to define exit pupil are usually for conventional telescopes and microscopes, where the entering light rays are nearly parallel and close to the optical axis. For these designs, the aperture stop, and therefore the exit pupil, is usually easily defined and explained. However, the design constraints for HMDs require that a relatively large object (the CRT phosphor) be viewed from a short object distance, while still providing a combination of large visual angle, large exit pupil size and enough eye relief to accommodate eye glasses. The relatively large CRT format, being close to the relay optics lenses, produces light rays that enter the optical system at large angles from the extreme off-axis points of the CRT format. The HMD optics aperture stop may be a combination of stops in the system and is not easily determined. It is usually left to the optical designer to define it and insure that it is obtained for the desired eye relief and FOV. However, the system designer must supply a reasonable justification for the desired exit pupil size based upon the anticipated luminance conditions, expected pupil sizes for the human eye, the anticipated quality and stability of the helmet system design into which the optics will be integrated, expected environmental conditions during operational use, and the realities of the optical design and weight penalties associated with increased exit pupil diameters. It should be noted that pupil size, as described in this paper, means the cross sectional dimension over which no vignetting of the HMD light occurs.

Figure 9 shows a simplified diagram of the human eye, taken from the Military Handbook of Optics (MIL-HDBK-141) with certain optical constants included, which can be used to obtain a first order cut at calculating the required exit pupil size. For this analysis, the entrance pupil of the eye has been assumed to be physically approximately 3.0 millimeters behind the cornea. The optical distance from the cornea to eye pupil is the physical distance divided by the index of refraction (3.05/1.337), of the aqueous humor, which is 2.25 millimeters. This is about the location, where HMD optical designers like to design for the exit pupil of the optics to be located. The center of rotation of the eye is approximately 13 millimeters behind the cornea, and thus the rotation center of the eye is 10 (13-3) millimeters behind the eye pupil, not at the pupil.

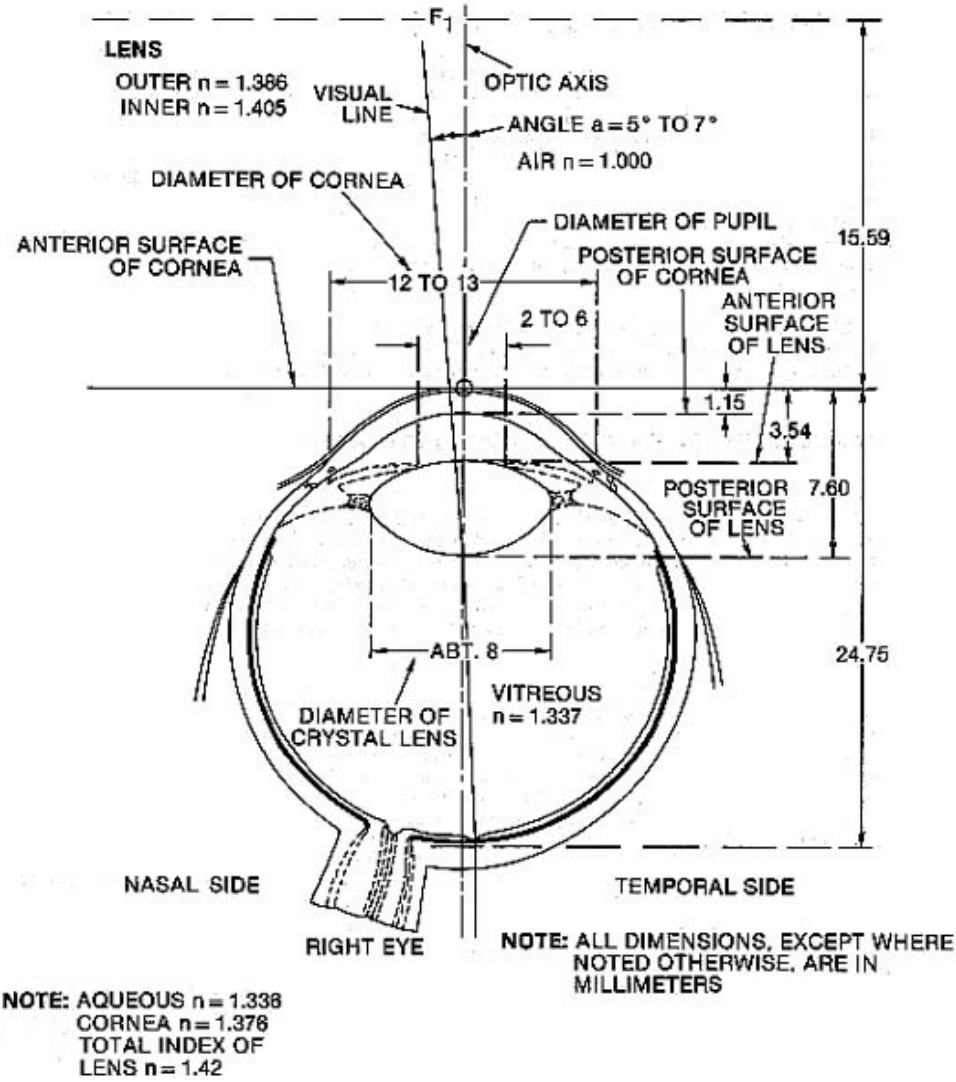

FIGURE 9
OPTICAL CONSTANTS FOR A "STANDARD EYE"

Figure 10 depicts the essential relationships needed to calculate eye pupil movement, as the eye is rotated to view off axis portions of the HMD FOV. Although eye pupil diameter can vary from 2 - 7 millimeters, depending upon display/ambient luminance conditions, the calculations were performed for eye pupil sizes of 2 and 5 millimeters, which is representative of variations that might be observed in a rotary wing aircraft HMD application. Using the dimensions and relationships shown in Figures 9 and 10, equation 4 can be derived.

$$\text{EYE PUPIL EDGE HEIGHT} = h = \frac{r[\sin(w + v)]}{\cos v} \qquad (4)$$

WHERE: $\cos v = r/(r + \Delta r)$, SO $(r + \Delta r) = r/\cos v$
AND $\sin(w + v) = h/(r + \Delta r)$

For the 2 and 5 millimeter eye pupil diameters, equation 4 reduces to

$$h_2 = 10.00[\sin(w + 5.739°)]$$

and

$$h_5 = 10.26[\sin(w + 14.10°)]$$

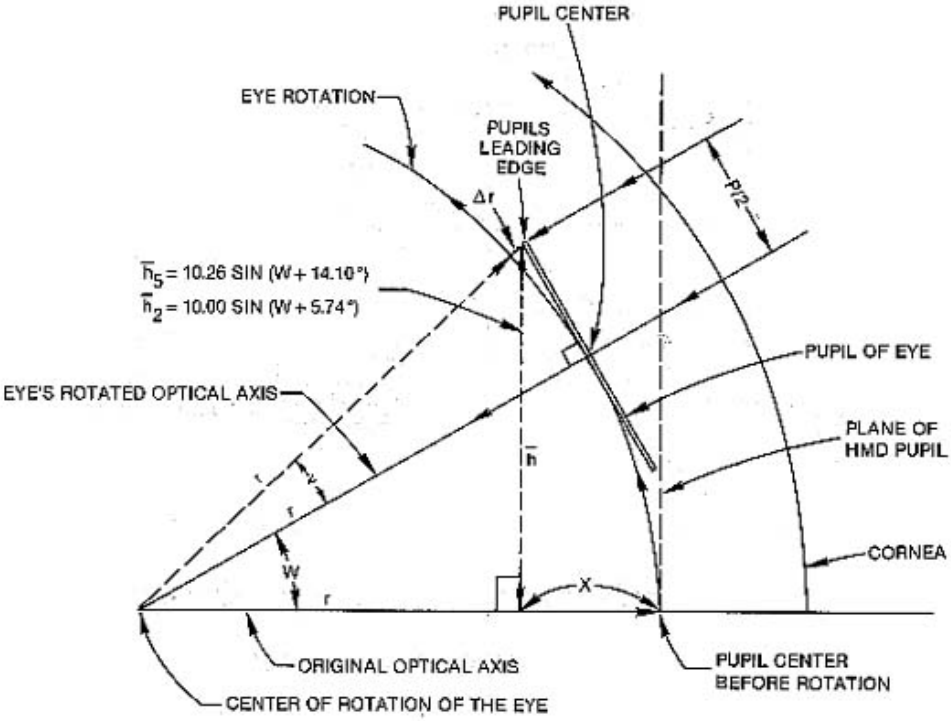

r = RADIUS OF ROTATION
P/2 = EYE PUPIL RADIUS
V = ANGLE SUBTENDED BY EYE PUPIL RADIUS
W = ANGULAR ROTATION OF EYE
$\bar{h}$ = ABOVE AXIS HEIGHT OF EYE PUPIL EDGE
X = DISTANCE PUPIL LEADING EDGE HAS RECEDED FROM PLANE OF HMD PUPIL

FIGURE 10
RELATIONSHIPS FOR EYE PUPIL EDGE POSITION FOR EYE ROTATION OF W DEGREES

The results of repeated computations using equation 4 for each pupil condition, are plotted in Figure 11 out to 50 degrees off-axis, representing a hypothetical HMD design with a 100 degree horizontal monocular FOV. The inherent assumptions made here are that there is no field curvature for the HMD exit pupil at the design eye relief (accomplished either through highly corrected optics or optical/electrical compensation at the CRT), and that the eye is moving along its horizontal axis. One must also consider the movement of the edge of the eye pupil edge back from the plane of the HMD pupil as the eye rotates, because the HMD pupil becomes smaller at some rate dictated by the optical design, as one departs from the pupil location at the design eye relief point of the optics. This distance denoted as "x" in Figure 10 can be computed in a fashion similar to that for equation 4 using the relationship shown in equation 5.

$$\text{DISTANCE BEHIND PLANE OF HMD PUPIL} = x = r - h[\cot(v + w)] \qquad (5)$$

The results obtained applying this relationship are plotted in Figure 12, out to an eye rotation angle of 50 degrees, which again represents a binocular HMD system with a monocular FOV of 100 degrees. It remains for the optical designer to specify to the VFD system designer, how exit pupil size decreases as one moves away from its plane of maximum cross sectional area.

In addition to HMD FOV and eye movement considerations, the effects of exit pupil size on optical system weight must be considered. For wide FOV display systems, exit pupil sizes beyond about 10 millimeters cause the weight of the HMD optical elements to increase so substantially that they quickly become unacceptable for aircraft helmet systems. One can achieve a first cut approximation of exit pupil size and weight impact, on a particular optical system design, using the relationship defined by equation 6 and illustrated by Figure 13 [20]. To use the relationship expressed by equation 6, one must insure that the optical design is corrected for the Abbe sine condition [20], a relationship that expresses a condition that applies to optical systems free of certain aberrations for off-axis points, particularly primary coma [21,24]. Most high quality HMD designs are corrected for these aberrations.

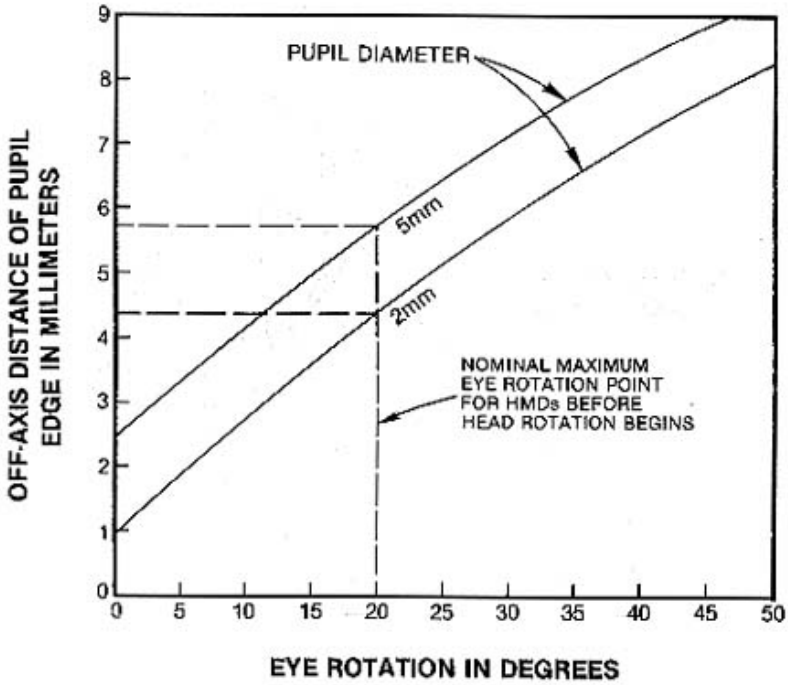

FIGURE 11
OFF-AXIS DISTANCE OF EYE PUPIL LEADING EDGE VERSUS EYE ROTATION ANGLE

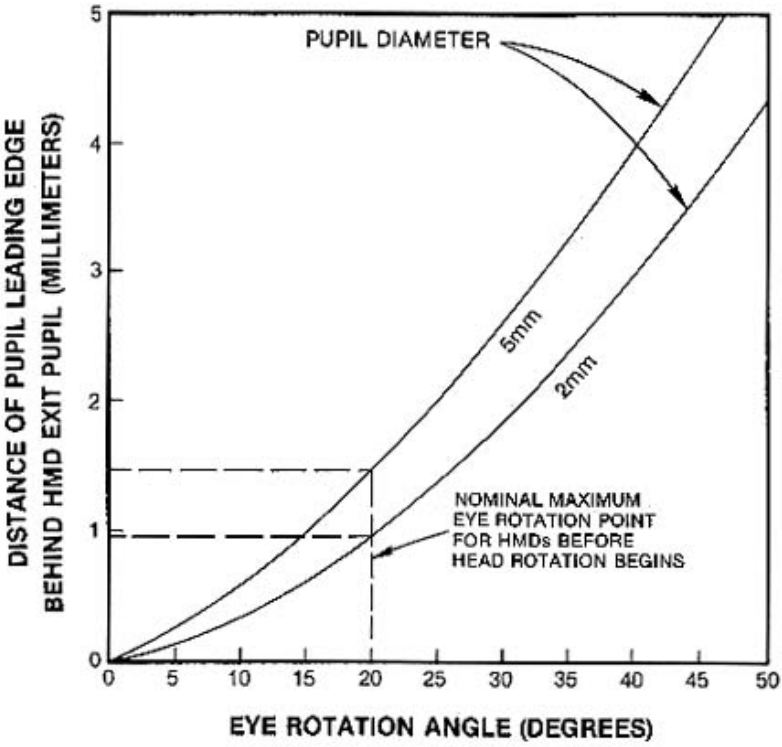

FIGURE 12
EYE PUPIL LEADING EDGE DISTANCE BEHIND HMD PLANE OF MAX PUPIL DIAMETER VERSUS EYE ROTATION ANGLE

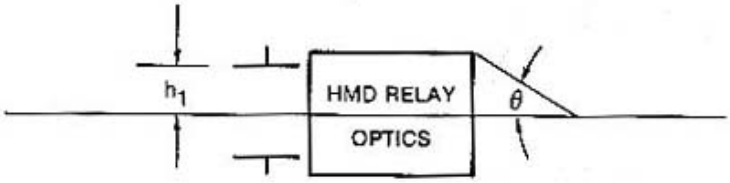

$$\theta = \mathrm{SIN}^{-1}(h_1/\mathrm{EFL}) \tag{6}$$

WHERE: h_1 = HALF-HEIGHT OF EXIT PUPIL OF HMD OPTICS

θ = SEMI-CONVERGENCE ANGLE FOR HMD OPTICS INPUT FROM IMAGE SOURCE INPUT (CRT)

EFL = EFFECTIVE FOCAL LENGTH OF HMD OPTICAL SYSTEM

FIGURE 13
DEPICTION/EXPRESSION OF RELATIONSHIP FOR DETERMINING EXIT PUPIL SIZE

For an F-Theta mapped system, such as the Farrand Pancake Window HMD and, indeed, most binocular HMD designs, the effective focal length (EFL) for the whole system can be computed from equation 7.

$$\mathrm{EFL} = \frac{[\text{CRT FORMAT SIZE (HOR)}]}{[\text{HMD HOR FOV (DEG)}]} \times \frac{(180°)}{\pi} \tag{7}$$

Results, originally formally presented in reference [20], for both the growth in semi-convergence angle and relay optics weight, are again presented here, by Figures 14 and 15, for completeness and to stress the difficulty of obtaining large exit pupils, for the range of system focal lengths normally obtainable for HMDs (see Table 2).

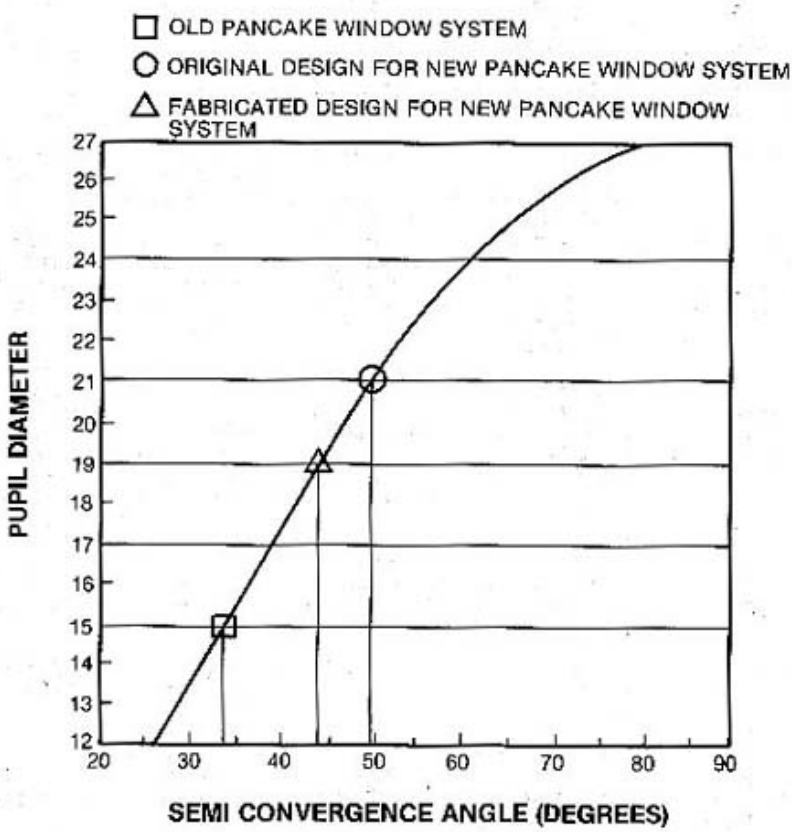

FIGURE 14
PLOT OF PUPIL DIAMETER VERSUS SEMI-CONVERGENCE ANGLE (PANCAKE WINDOW HMD)

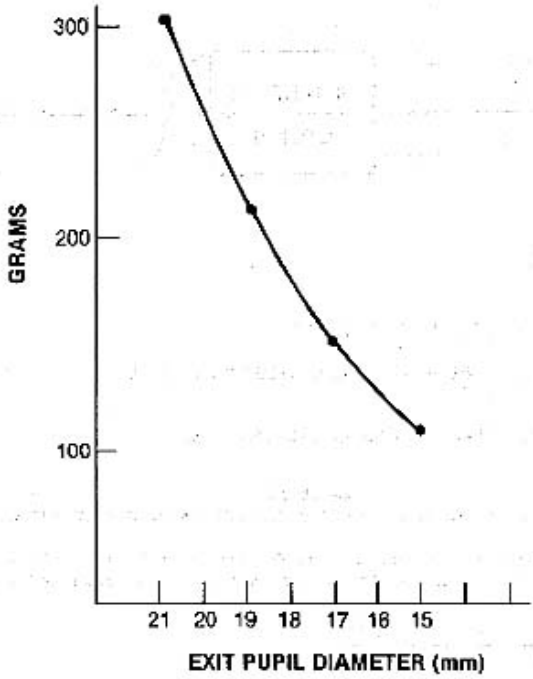

FIGURE 15
PLOT OF RELAY OPTICS WEIGHT VERSUS EXIT PUPIL DIAMETER (PANCAKE WINDOW HMD)

The remaining major factors affecting exit pupil size are the environmental operating conditions and the design of the headgear. Clearly, aircraft operating in a high "G" environment may need a larger exit pupil to prevent display vignetting due to helmet slippage on the head. This may be largely overcome by designing a system with a smaller more compact FOV with less eye relief, which in turn prevents the creation of significant inertial moments that would accentuate display movement from external forces. Also, as will be presented, the design of an integrated headgear which anticipates and attempts to prevent large helmet movements can also reduce the need for very large exit pupil sizes.

Hence, a generalized worst case condition might be hypothesized based upon, (1) feasible operational designs, which will probably not achieve a monocular FOV greater than 60 degrees horizontal by 45 degrees vertical (resulting in maximum off-axis angles of +/- 30 and 22.5 degrees respectively, and therefore, a radial angle of 37.5 degrees), and (2) the sparse human factors data related specifically to HMDs, which suggests that the human operator does not usually move his eye off-axis when viewing the HMD by more than +/- 20 degrees before moving his head. An important qualifier here, as mentioned in [20], are binocular display systems which rotate the HMD optical axis to achieve greater horizontal FOV, using partial overlap of the monoculars. Figure 16 depicts the exit pupil cross section, as it would appear located normal to the eye with no tilt of the binocular optical axes (which would be employed for a system having partial overlap of its monoculars). Also portrayed are important HMD system physical relationships. The relationships portrayed by Figure 16 should be considered a worst case condition, because the exit pupil size is based upon a full field condition. If the portion of the field (or object size), which must be visible simultaneously is reduced, then the diamond shape area, over which the reduced field can be simultaneously viewed, will become proportionally much larger. As Figure 16 shows, the only honest specification for eye relief/exit pupil size, is one that results in the proper positioning of the maximum cross-sectional pupil area on the eye. Other positioning points result in a reduced effective exit pupil size for no vignetting. If the orientation of the HMD exit pupil is normal to the cornea, then symmetric movement of the eye is possible with similar vignetting or lack thereof. However, if as noted in [20], the monocular HMD optical axes are turned out to obtain a partial overlap condition, then the movement to one side of the exit pupil (normally the direction for divergence of the eyes), is restrained for the nominal interpupillary distance (IPD). This must be compensated for by adjusting the optics to a somewhat wider-than-normal IPD (usually by 3-5 millimeters).

Given the preceding considerations, a worst case condition can be picked for the 5 millimeter pupil size at the 20 degree off-axis position, which results in a nominal indicated translation of + or - 6 millimeters. If one then adds to this + or - 3 millimeters of translation due to helmet movement (a reasonable amount for a well designed integrated helmet system, used for a rotary wing aircraft or simulator application), one arrives at a nominal exit pupil size of about 18 millimeters. In practice, at least for the breadboarded designs listed in Table 2, an exit pupil size of 14 - 17 millimeters has been found to be sufficient. For applications where weight is extremely important, a pupil size toward the low end of the range would probably be selected.

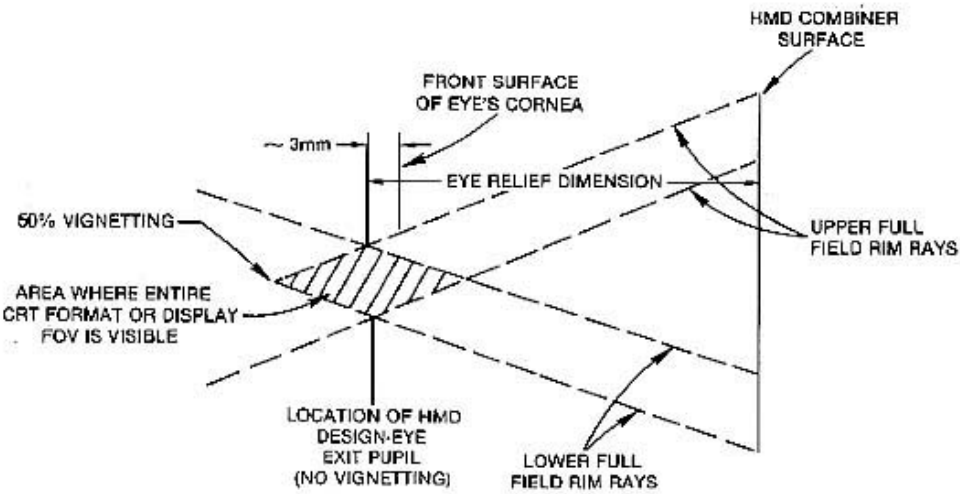

FIGURE 16
EXIT PUPIL/EYE RELATIONSHIPS

EYE RELIEF/CLEARANCE

As depicted by Figure 16, the distance used to specify eye relief, should be measured from the viewing center of the final optical surface closest to the eye, to the optimal position for the largest cross-sectional area of the optics' exit pupil with respect to the eye. Table 2 lists a range of different distances for the five optical breadboards, which were developed as part of the VPD effort. Generally, designs providing 35 millimeters or more of eye relief, present no major operational problems, and allow most eyeglasses to be accommodated. However, it is prudent to keep eye relief as small as possible, because for a given FOV, as eye relief increases, so does the size and weight of the optics, in a manner proportional to the design approach employed. Another similar figure-of-merit (FOM), used to describe display system positioning around the eye, is eye clearance. The generally accepted meaning of this term is that it defines the point of closest approach of the HMD combiner and/or beamsplitter assembly to any part of the eye. A curved/tilted combiner assembly can often yield much smaller eye clearance distances than those given for eye relief. Experience with the breadboard designs listed in Table 2 shows that eye clearance distances of less than 20 millimeters present major difficulties, particularly when its use in an operational aircraft environment is contemplated.

COLLIMATION

For the VPD application, it is usually required that the display imagery, which is overlayed on the ambient or outside-of-cockpit-scene be at optical infinity (collimated). This permits minimal or no refocusing time between the HMD display and the outside world scene. It is also important because the helmet sighting system (as shown in Figure 1) uses the VPD HMD to image its sighting reticle. The reticle is electronically aligned with the helmet sensor during the system boresighting process. If the reticle image is not collimated, then there will be parallax error between the helmet sighting system and external scene for targets being designated by the display sighting reticle. Collimation can be checked by placing a powerful (20x magnification or higher) telescope focused for infinity in the HMD exit pupil, and checking for sharpness of the display imagery. If the imagery is in focus, one can usually be sure, that the display is collimated to within a small fraction of a diopter, which is normally sufficient. Display designs which have their combiner surfaces separate from the helmet lens or visor, usually maintain collimation much better than designs that use the helmet visor as the last display imaging surface. This is because visors are normally susceptible to deformations during helmet flexure, etc., which alter the focus of the display system. Attempts were made, early in the VPD HMD program, to develop an alternate focus or image location for the display format, so that the display imagery might also be optically located at the same distance as the cockpit instrumentation when the pilot was attempting to interact with internal cockpit instruments. The two conditions would be monitored by the helmet position/orientation sensing system and the image location would be rapidly shifted automatically. However, no compact, lightweight adjustment mechanism could be found and attempts to achieve this function were abandoned.

MAPPING/DISTORTION

For binocular HMD designs, particularly designs where the monocular fields are partially overlapped, F-theta mapping, which provides constant angular resolution over the display FOV, is often the best choice for the mapping of a display system's angular resolution [03,20]. However, F-tangent theta mapping, where the tangent of the field angle is proportional to the image source chordal height, represents the no-distortion mapping condition. F-theta mapping, where the image field angle is proportional to the image source chordal height, yields pincushion distortion. Therefore, some form of compensating distortion, nominally representing barrel distortion, must be introduced into the CRT imagery. The distorted CRT imagery corrects or linearizes the virtual image of the CRT when viewed through the HMD optics. Figure 17 depicts, in simple form, the mapping relationships between the eye and CRT, and shows the derivation of the relationship for the required correction. Alternate explanations of

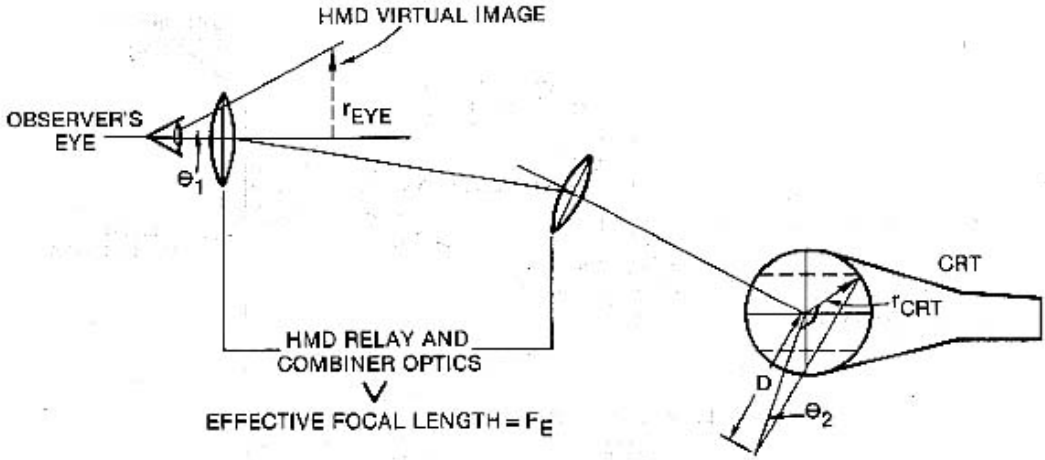

$F(\Theta)$ MAPPED OPTICS $\Longrightarrow$ $r_{EYE} = F_E(\Theta_1)$; WHERE Θ_1 HAS UNITS OF RADIANS

$F - TAN(\Theta)$ MAPPED CRT $\Longrightarrow$ $r_{CRT} = D(TAN(\Theta_2))$

IF NO DISTORTION PRESENT THEN $\Theta_1 = \Theta_2$

THEREFORE $r_{EYE} = F_E(ARCTAN(\frac{r_{crt}}{D}))$

FIGURE 17
CRT/OPTICS MAPPING COMPENSATION

this problem may be found in [01,02,20,22]. The CRT drive electronics' deflection circuitry must be designed to support such correction. The VPD system integrator must be sure that the required correction, and, therefore, expansion or compression of CRT pixel spacing at different portions of the CRT faceplate, can be supported by the inherent performance of the CRT and its drive electronics. The arctangent function is difficult to implement with analog display electronics. Therefore, CRT deflection geometry correction is usually implemented by a truncated polynomial approximation, using terms out to third order, as discussed later in this paper.

Residual field curvature may also be left in the optical design because its complete elimination would result in a larger number of optical elements and, correspondingly, a heavier design. This residual field curvature is usually reduced to negligible proportions by adding a corrective curvature to the CRT faceplate, resulting in some additional complexity for the CRT, but adding almost no additional helmet system weight. The shape of this curvature may be either convex or concave, depending upon the requirements of the optical design.

LIGHT MANAGEMENT (TRANSMISSION EFFICIENCY/MODULATION CONTRAST)

As mentioned much earlier in this paper, the contrast achieved for the displayed imagery and the amount of see-through permitted to the ambient scene is probably the most important design relationship for most HMD applications. This is especially true for the VPD, where the head mounted display is supposed to be the pilot's primary display device, and is critical for maintaining the required level of "situation awareness." For the systems listed in Table 2, the key to light management and the establishment of the proper transmission efficiencies for image source and ambient light is the design of the display combiner and/or beamsplitter elements.

The two most common configurations for the HMD combiner/beamsplitter (C/B) components, and their relationship with respect to the image source/relay lens input and observer's eye position, are shown in Figures 18a and 18b. The coatings used on each of the C/B surfaces are optimized for the intended range of applications including day/night viewing with symbology and/or imagery. They must also accommodate the performance of the image source, and its capabilities to adjust for the relative transmission efficiencies, for light arriving at the eye from the display image source or the outside scene. The most often used figure-of-merit (FOM) describing the quality of C/B light management (derived in reference [22]), is again listed here in equation 8 for completeness and the convenience of the reader who might want to compute hypothetical cases for the systems listed in Table 2. Equation 8 specifies the maximum amount of HMD contrast that can be achieved for a given viewing condition and the coatings design used in a particular HMD design. The value obtained in Equation 8, can be convoluted with (multiplied by) the system MTF computed for the CRT-drive electronics and optics, to obtain an estimate of total system MTF [22,23]. The derivation of system MTF relationships, for the CRT/optics combination, has been explained in reference 22, and will not be repeated here. Values for Cd of 0.2 to 0.3 are generally accepted as providing enough contrast to view line graphics symbology. Values for Cd of 0.8 to 0.9 are felt to provide enough contrast, to portray approximately 8 discernible linear $\sqrt{2}$ gray shades of imagery [22,23].

Insertion of a few values into equation 8, and a review of reference 22, should be sufficient to emphasize the importance of the type and quality of the C/B coatings. Systems utilizing a combiner system like that shown in 18a, such as systems 4 and 5 in Table 2, are, with current technology, much

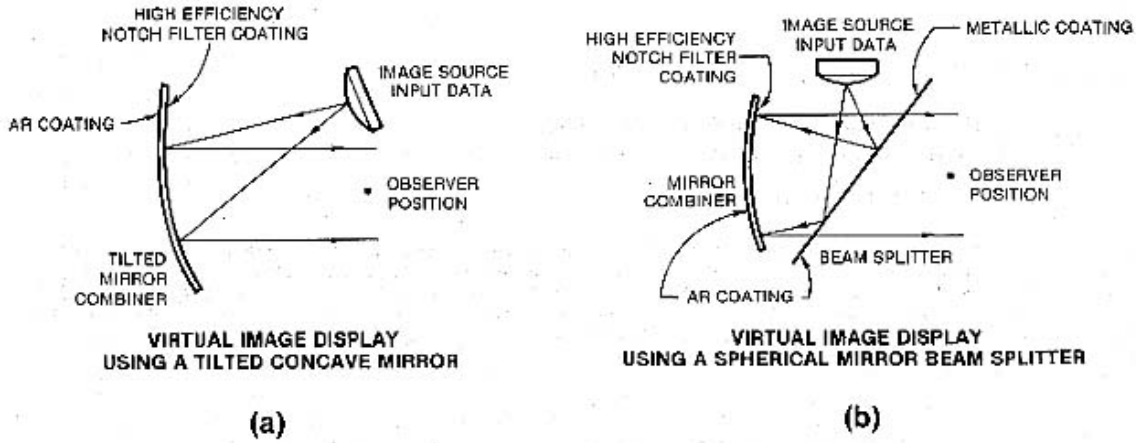

FIGURE 18
COMMON HMD COMBINER RELATIONSHIPS

$$Cd = \frac{(Li) \times (Rc)}{(Li) \times (Rc) + 2(Lb) \times (Tc)} \qquad (8)$$

WHERE: Cd = CONTRAST (MAXIMUM) OF HMD IMAGE

Li = HMD IMAGE SOURCE LUMINANCE PRIOR TO COMBINER

Lb = BACKGROUND SCENE LUMINANCE

Rc = COMBINER REFLECTANCE COEFFICIENT (*) (FOR VPD HMD APPLICATIONS NORMALLY OPTIMIZED FOR P53 PHOSPHOR GREEN EMISSION PEAK)

Tc = COMBINER TRANSMITTANCE COEFFICIENT (*) (TOTAL SCOTOPIC TRANSMISSION)

(*) FOR WAVELENGTH SENSITIVE COATINGS, INTEGRATION OVER WAVELENGTH IS ASSUMED

more efficient light management systems, since they do not suffer the approximate 75% loss of luminance at the beamsplitter's metallic coating surface, as shown in 18b, and exemplified by systems 2 and 3 in Table 2. However, for the same FOV, systems like 4 and 5, which use primarily refractive optics to convey the CRT image to the eye, are usually much heavier than catadioptric designs, like systems 2 and 3. As described in [14], narrowband high efficiency multilayer dielectric coatings have been developed, which are tailored to reflect the primary spectral band of CRT phosphors, such as P43 and P53. These coatings allow most of the external ambient light to pass with minimal attenuation, except in the band set aside for reflection of the CRT image source light. A drawback to these coatings is that they require combiner designs where the incident angle of the image source light is almost constant across the entire FOV, and they attenuate a wider (60 to 80 nanometers) bandwidth than desired of the ambient visual spectrum [14]. A relatively new type of reflective/transmissive layer, dubbed a holographic simple mirror, has recently become available, and attempts are being made to incorporate this technology into HMD systems. Holographic simple mirrors are made from volume-phase reflection type holograms embracing photochemical, interference and refractive phenomena, and diffract light as conventional mirrors reflect light [09]. They seem to hold promise for moderating the angle-sensitivity and bandwidth problems associated with multi-layer dielectric coatings [09]. Multilayer dielectric coatings, with wide reflective bandwidths "notch out" a significant portion of the ambient spectrum, often adding a slight pink tinge to the ambient scene. In contrast, the holographic mirror technology offers the possibility of obtaining very narrow reflective bands of 10 to 20 nanometers or less, which can be tailored to the primary emission peak of the phosphor, thus allowing transmission of more of the outside ambient light. Antireflection (AR) coatings can be formulated from a number of materials [14, 15], and must be applied to prevent unwanted reflections that cause second surface ghosting, as explained in [22]. Problems with secondary image ghosts may be further reduced by striking an appropriate balance for the attenuation of ambient light, from the outside scene, using both surface coatings and continuous absorptive media throughout the combiner material.

An additional issue, not often discussed for HMD design and difficult to assess, is the optical system MTF and the relevancy of data supplied by the optics' manufacturers concerning MTF. A relationship, that can be used to compute a close approximation to tested optical system MTF performance, based upon preliminary optical design data, is given in equation 9. Using system 2, Table 2 as an example, the system f# would be 16.9/21, which equals 0.8. However, equation 9 must be modified to reflect the system MTF (that of the measurement system/HMD optics), or the "relative aperture" of the system. A reasonable setting for the measurement system is an aperture of 4mm, which reflects a midpoint for the

FOR OPTICAL SYSTEM DIFFRACTION LIMITING RESOLUTION:

$$(\text{LINE PAIRS/mm}) = \frac{1}{(f\#)(\lambda)} \qquad (9)$$

WHERE: $f\# = \dfrac{\text{EFFECTIVE FOCAL LENGTH OF OPTICAL DESIGN}}{\text{EXIT PUPIL (RELATIVE APERTURE) DIAMETER}}$

λ = WAVELENGTH OF LIGHT (IN MILLIMETERS)

eye's range of pupil sizes. The f# of the measurement system is then 16.9/4, which equals 4.225. Using the wavelength for peak green light for P53 phosphor of 545 nanometers (0.000545mm), equation 9 gives a diffraction limited resolution of 434 lp/mm. Using the normalized values for MTF, for an ideal aberration free system [21], as a function of percent of cutoff, given in Table 3, one may plot the the ideal theoretical MTF curves for the HMD/test instrumentation system, (assuming it is well corrected and free of significant aberrations), as shown in Figure 19.

TABLE 3
NORMALIZED MTF VALUES AS A FUNCTION OF PERCENT OF CUTOFF

PERCENT OF CUTOFF	MODULATION CONTRAST	PERCENT OF CUTOFF	MODULATION CONTRAST
0	100.0	55	33.7
5	93.0	60	28.5
10	87.3	65	23.5
15	81.0	70	18.8
20	74.7	75	14.4
25	68.5	80	10.4
30	62.4	85	6.8
35	56.4	90	3.7
40	50.4	95	1.3
45	44.7	100	0
50	39.1		

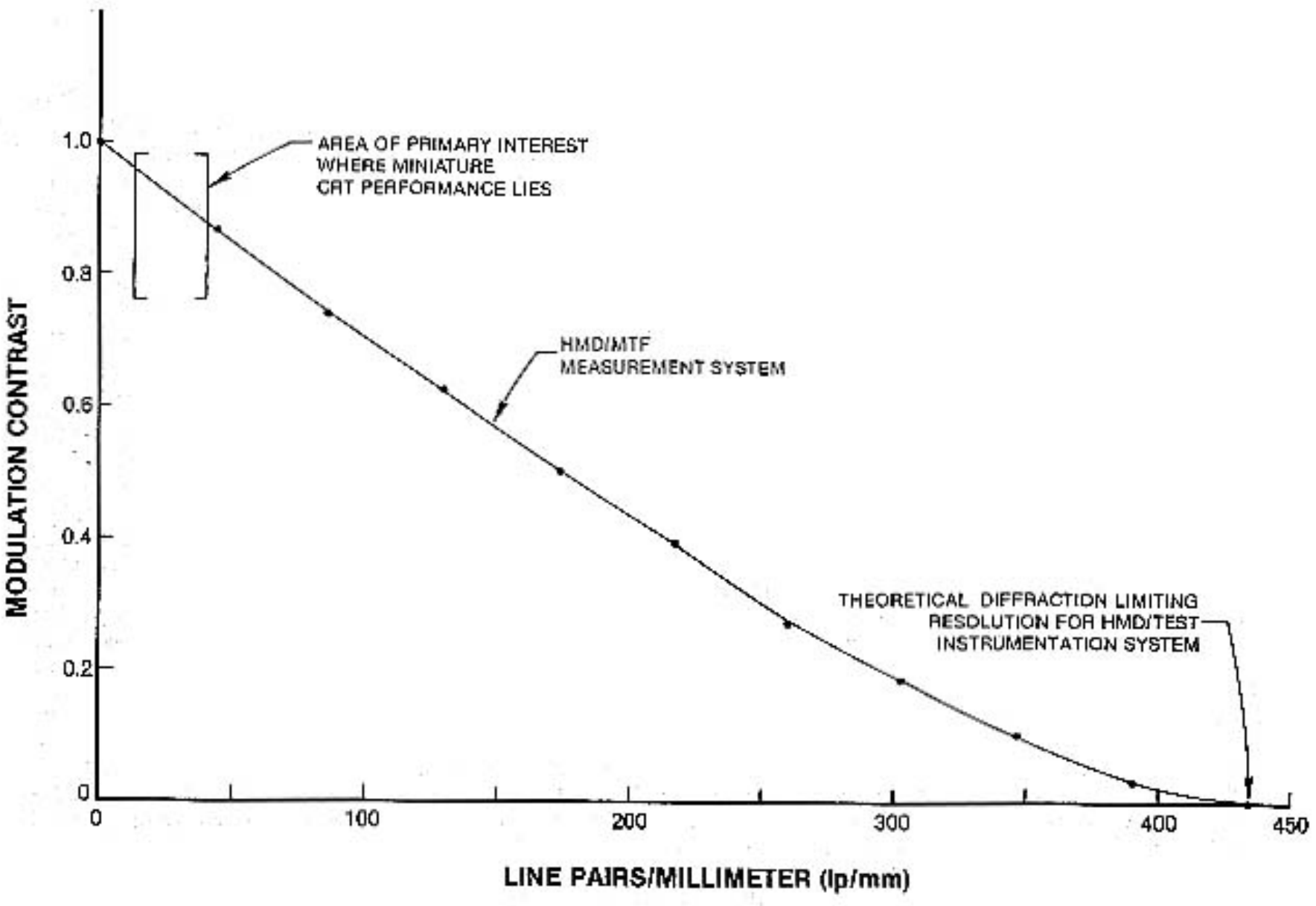

FIGURE 19
PLOT OF IDEALIZED OPTICAL MTF FOR MEASUREMENT SYSTEM/OPTICS

The bracketed area of Figure 19 highlights the region of interest, where the nominal performance of current CRT image sources fall. Current miniature CRTs resolve less than 40 lp/mm. Similar plots can be made for a particular HMD design, and used to check both the results of optics acceptance testing and combined with equation 8, to hypothesize more exactly expected HMD system performance. It must be stressed that the curve shown depicts highly ideal on-axis conditions. Measured values for the bracketed area of spatial frequencies, that depart markedly (i.e., down to about 50 percent response) from the representative curve shown in Figure 19, do not necessarily indicate an inferior optical design. However, the aircraft sensor system designer usually insists on reserving about 60 percent of the total sensor/HMD system MTF for the sensor system. The implication of this requirement for the optical design, is that values close to those shown in Figure 19 must be obtained, to allow total system MTF requirements to be met. In practice, it has been possible to achieve such values for certain HMD optical designs.

COLOR

The incorporation of a color-corrected design into the VPD HMD optics is certainly a desirable feature because color image source inputs can add significant additional information and cues. Color imagery may also aid "situation awareness," especially when the HMD sensor scene is the primary input from the outside world. More importantly, CRTs using narrowband phosphors, which may have significant spectral emission peaks at other wavelengths in the visual spectrum, need not be filtered, and therefore, all of their light can be used to maximize luminance contrast at the display combiner. However, color-corrected optics usually result in a system with many more optical elements, increasing helmet weight significantly. As Table 2, shows, only one of the five VPD HMD breadboards is a polychromatic design because of the extreme weight penalties, that are associated with full color-corrected designs. An even more important factor is that the combiner, must now incorporate lower efficiency broad spectrum reflective coatings for the HMD image source light, and, consequently, the advantage of using a narrow band reflective/broadband transmissive coating scheme, to maximize transmission of both the image source and ambient light, is lost. Luminance contrast ratios between the HMD imagery and the ambient scene may also be reduced.

Monochromatic HMD designs require narrowband phosphors to avoid lateral and axial color. Lateral color artifacts produce a blurred second image of a different color, due to differences in image magnification. The result is different image sizes for different wavelengths of light [21]. Axial color artifacts show up as longitudinal chromatic aberrations, due to light rays of differing spectral wavelength, undergoing different amounts of refraction [21]. These color aberrations are often most noticeable at the edge of the HMD exit pupil. Tolerances for axial and lateral color that seem to have worked well for the VPD systems are provided in the section concerning miscellaneous optical specifications in Table 4.

The phosphor of choice for the VPD HMD designs has been P53, because of its extremely rugged thermal and emission life characteristics and luminous efficiency. The yellow-green primary emission spectrum of P53 provides good color contrast against colors found in land/sea terrain, and is close to wavelengths, where the eye's spectral response is at a maximum. P53 though, has significant red and blue emission peaks which must be removed for proper operation with the VPD HMD monochromatic designs. For systems that require glass CRT faceplates, attempts were made to utilize multilayer coatings developed by Optical Coating Labs Inc. (OCLI) between the CRT phosphor and faceplate that would both filter out the red or blue peaks, and allow more of the green light to exit the faceplate [15]. These antihalation coatings, when used with a compatible antireflection coating on the outside surface of the faceplate, also enhance the display contrast obtained from glass faceplates CRTs. Preliminary experience with these coatings shows that improved contrast and luminance are obtained, but some residual and noticeable red and blue light is still transmitted. This has required the inclusion of a green transmissive filter, to completely suppress remaining red or blue emissions. For VPD HMD monochromatic designs which require a shaped fiber optic faceplate, the green transmissive filter is also needed. Use of the OCLI coatings with fiber optic faceplate systems has not been possible to date, because their physical properties do not provide necessary tolerance to the high temperatures to which the coatings/faceplate are subjected during the coating deposition process.

MISCELLANEOUS VPD OPTICAL SYSTEM SPECIFICATIONS

Remaining miscellaneous VPD HMD system parameters and suggested tolerances that have produced satisfactory results for the breadboard systems listed in Table 2 are listed in Table 4. Some additional explanation should be given here concerning the requirement for IPD adjustment and alignment (allowed divergence, dipvergence, etc.). The calculations for maximum exit pupil size, covered earlier, do not include provision for centering the HMD exit pupils for an individual's eye center-to-center distances. Interpupillary distances vary from between 55 to 74 millimeters for the 1st to 99th percentile for adult humans, so some reasonable allowance must be made for this variation to prevent vignetting, while minimizing the range of adjustment allowance, which can have a significant impact on the helmet/display optics interface and system weight. The variation given in Table 4, specifies a range that appears to have produced satisfactory results, but should not be considered definitive.

Alignment tolerances are also felt to be critical, because, while human accommodative (focus) and convergence powers are substantial, failure to insure proper alignment, may result in fatigue and psychovisual problems of unsuspected origin during extended operational use of a misaligned system. Divergence, which is an unnatural and difficult condition for the eyes, should be set to zero. This is normally easily accomplished, because the binocular HMD is adjusted to error toward some convergence, during mechanical/electronic alignment. However, convergence can produce false stereoscopic cues between the monoculars and, therefore, should also be minimized. A reasonable convergence setting should produce an accommodation error of less than a tenth diopter. This setting can be computed using the relationship, that convergence distance in millimeters, equals the interpupillary distance (IPD) in millimeters divided by the convergence error in radians. For a nominal IPD of 63 millimeters, and 12 arc minutes of convergence, as given in Table 4, the convergence distance is 10,938 millimeters or 10.9 meters. Since diopters equal the reciprocal of distance in meters, the convergence error represents

less than a tenth diopter, which is an appreciably smaller error than that in prescription spectacles. It remains for operational testing of the VPD binocular HMD to verify that this criteria provides satisfactory results, or should be modified. Dipvergence should also be made as close to zero as possible to prevent mismatch between symbology or scan lines. Normally, a dimensional tolerance of one scan line width (about 3 arc minutes) is desired, but cannot be provided by the optics/headgear adjustments alone, so proper electronic alignment patterns and adjustment capability, must be incorporated into the CRT display electronics.

TABLE 4
SUMMARY OF MISCELLANEOUS REQUIREMENTS FOR VPD HMD OPTICS

ABERRATIONAL DISTORTION	
CENTER	UP TO 0.2 PERCENT
MAX OFF-AXIS	UP TO 0.5 PERCENT
COLOR (MONOCHROMATIC APPROXIMATION)	535-555 NANOMETERS
AXIAL COLOR	LESS THAN 1.5 ARC MINUTES
LATERAL COLOR	LESS THAN 3.0 ARC MINUTES
MAGNIFICATION IMBALANCE FOR BINOCULAR DISPLAY CONFIGURATIONS	LESS THAN 1 PERCENT
SEE-THRU DISTORTION	LESS THAN 2 PERCENT
MAXIMUM CONVERGENCE/DIVERGENCE	12/0 MINUTES OF ARC
MAXIMUM DIPVERGENCE	6 MINUTES OF ARC
PERIPHERAL VISION OCCLUSION	MINIMIZED
IMAGE-TO-GHOST RATIO	120/1
MAXIMUM ACCEPTABLE LIGHT IMBALANCE	0.5 PERCENT (OPTICS ONLY)
BINOCULAR IPD ADJUSTMENT	58 TO 72 MILLIMETERS

VPD HMD IMAGE SOURCE

As explained earlier during the discussion concerning VPD design alternatives (see Figure 3), the HMD with head mounted image source was selected as the only viable alternative, given the current state of technology. Great strides are being made with solid state image sources, and laser generated displays loom on the horizon as a potentially powerful alternative. Even so, significant advancements have also been made in miniature CRT technology, which still makes them the current best choice for a VPD HMD application. Besides their basic light conversion efficiency and resolution, there are other reasons for selecting the CRT. One is that CRT image source technology does not impose a strict allocation of display elements across the display format whose relative size and activation characteristics are fixed. Therefore, horizontal/vertical smoothing (antialiasing) techniques, may be applied to smooth the appearance of straight edges (particularly from man-made objects), that cross the scanning format diagonally, producing staircasing effects and visual artifacts. Generally, a solid state display requires several times the inherent resolution of a CRT to match the apparent smoothness of the CRT's imagery. Since current miniature CRTs can provide in excess of 1 million resolution elements, solid state displays for HMDs have significant performance barriers to overcome. In small sizes they currently have much lower resolution than CRTs. In addition, a CRT image source may present randomly-written vector graphic information, providing only smooth line segments at any orientation on the display. This symbology may be updated at refresh rates much higher than normal video field rates to achieve much brighter peak line luminance levels for daylight viewing. This is possible by taking advantage of optimum charge pumping techniques, which some of the new rare earth phosphors permit [04]. For these reasons, only the CRT image source is considered.

Figure 20 depicts the direct impact on miniature CRTs of certain image source parameters due to the requirements for good display contrast and resolution on the HMD, especially when employing a see-through combiner. CRT line widths must be kept small, and active area format sizes made as large as possible, given an overall maximum allowed CRT diameter of about one inch. Line rates, refresh rates and, as possible, anode potentials must be increased to balance resolution and light conversion efficiencies. At the same time, faceplate contrast must be preserved so that individual adjacent resolution elements remain distinct and discernible to the eye. This requires a high efficiency, fine grain size phosphor formulated for optimum light emission/transparency and thermal conductivity, coupled with a faceplate system, such as those using fiber optics, which offer improved contrast.

To bring about substantial performance gains in the CRT during the VPD HMD effort, an attempt was made through a number of studies [04,17,18], to identify major problem areas, where improvement had to be made. These are listed in Table 5. Improvements in the problem areas listed in Table 5, had to be made in the context of the design limitations imposed, by the electromagnetic deflection(EMD)/electrostatic focus lens (ESFL) system, which has been found to be most suitable for miniature CRT applications. A representative CRT design, showing the major relationships between internal

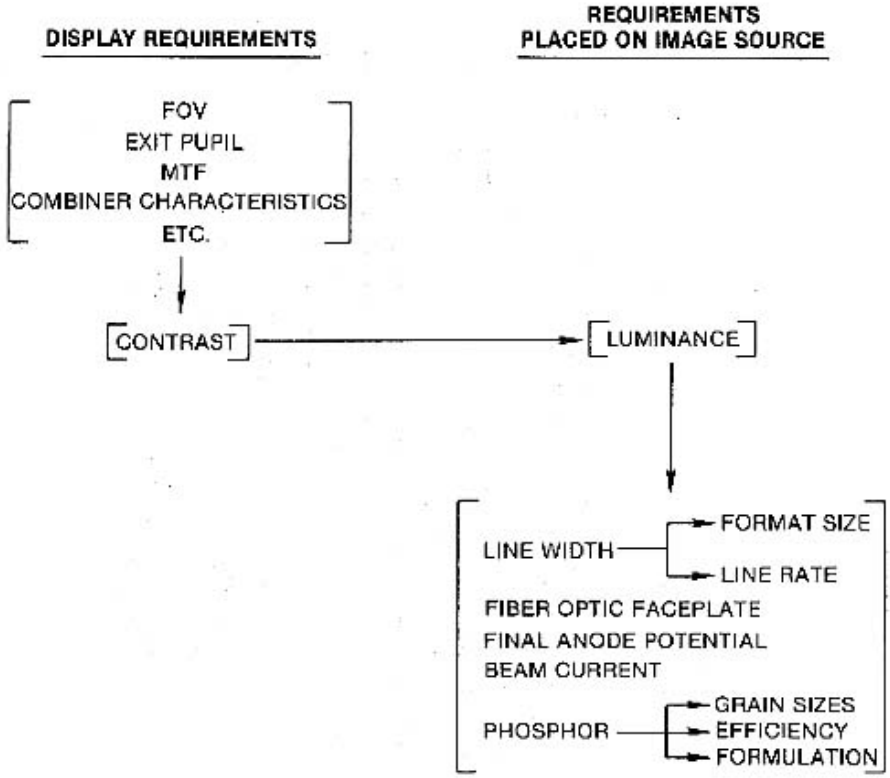

FIGURE 20
DISPLAY REQUIREMENT IMPACT ON IMAGE SOURCE PERFORMANCE

TABLE 5
MAJOR PERFORMANCE LIMITING PROBLEM AREAS FOR MINIATURE CRTS

CRT FACEPLATE SYSTEM	ELECTRON OPTICS	OTHER PROBLEMS
MAINTAIN HIGH LUMINOUS EFFICIENCY DURING ALL CRT DRIVE CONDITIONS	ELECTRON OPTICS CAPABLE OF FOCUSING SMALL BEAM DIAMETER AT HIGH BEAM CURRENTS	ACCELERATION VOLTAGE
		CRT's PHYSICAL SIZE
	THERMAL LIMITATIONS	MAGNIFICATION
MINIMIZE PHOSPHOR'S CONTRIBUTION TO BEAM SPREADING/LINE WIDTH		GETTERING
	SPACE CHARGE SPREADING	DEFLECTION YOKE PERFORMANCE
IMPROVE CONTRAST	ABERRATIONS	CATHODE LOADING

components, is diagrammed in Figure 21. Although new and promising alternatives are being investigated [18], nearly all ESFL designs for CRTs use either; (1) bipotential lenses or, (2) unipotential or einzel lenses. In general, better center resolution is achievable with bipotential lens CRTs than unipotential lens CRTs, because of the more favorable beam diameter magnification value associated with bipotential lens designs [17,18]. A first cut at determining the magnification and, therefore, beam spot size (ignoring the effects of the phosphor faceplate system) may be made as shown in equations 10 through 12.

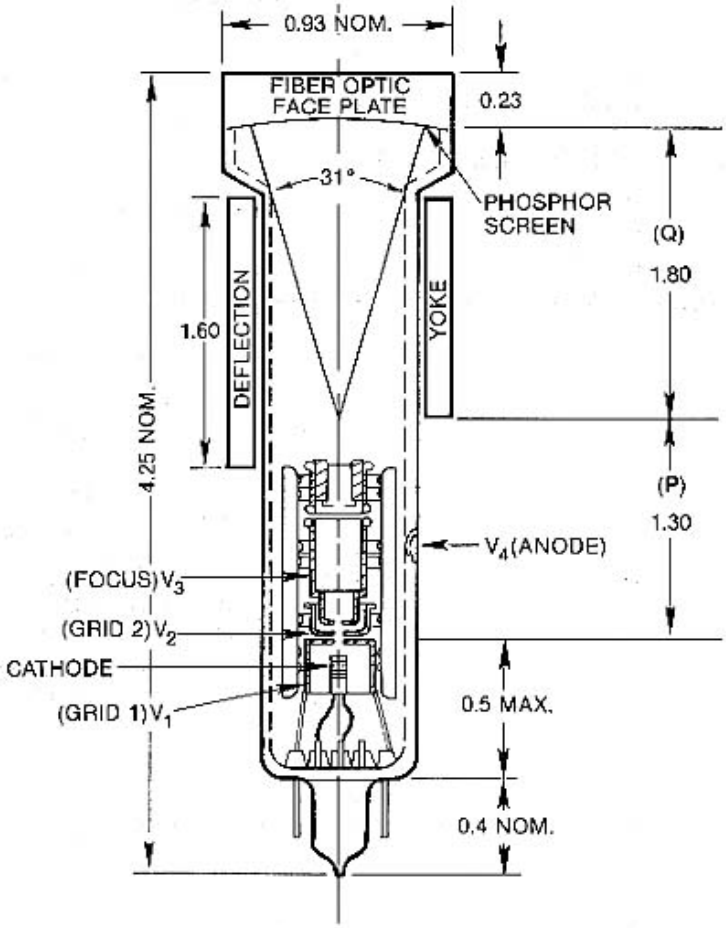

FIGURE 21
REPRESENTATIVE EMD/ESFL BIPOTENTIAL LENS MINIATURE CRT

$$\text{GEOMETRIC MAGNIFICATION} = M_1 = Q/P \tag{10}$$

WHERE: Q = DISTANCE FROM DEFLECTION CENTER TO SCREEN

P = DISTANCE FROM G_1/G_2 CROSSOVER TO DEFLECTION CENTER

$$\text{ELECTRONIC MAGNIFICATION} = M_2 = (V_3/V_4) \tag{11}$$

WHERE: V_3 = CRT FOCUS VOLTAGE

V_4 = CRT FINAL ANODE VOLTAGE

$$\text{OVERALL MAGNIFICATION} = M_3 = M_1 \times M_2 \tag{12}$$

For the CRT shown in Figure 21, which might operate at an acceleration potential of 13 kilovolts, and nominal focus potential of 2.5 kilovolts, a value for M_3 of 0.266 is obtained. This value may be multiplied by the virtual crossover diameter, supplied by the CRT manufacturer, to determine a first order approximation to spot size, ignoring phosphor/faceplate system contributions. Unipotential lenses give better center-to-edge uniformity than bipotential lenses [17,18]. This advantage can be overcome by using shaped fiber optic faceplates, which minimize deflection defocusing and using dynamic focus voltage correction, which minimizes focus lens aberrations while maintaining the significant spot minification advantage demonstrated by equation 11. Therefore, for the VPD HMD effort, bipotential lens designs were given primary emphasis.

An accepted method of determining a FOM for CRT performance, which is in essence one for spot size or resolution, for a given luminance level, is to determine the RSS (square root of the sum of the squares) of the individual contributing factors to CRT spot size. Such a relationship, presented in slightly different form in many references [12,17,18], and taken from [18], is given in equation 13. For the VPD effort, the major design emphasis focused on maximizing the CRT's final anode potential, while remaining within safe operating limits, investigating the effects of increasing the G_2 voltage and raising G_1 cutoff, maximizing the effective cross-sectional area of the focus lens, improving deflection yoke characteristics, and optimizing phosphor grain size/composition/deposition techniques.

$$d_{TOT}^2 = d_{1st\ ORD}^2 + d_{SPHER}^2 + d_{ASTIG}^2 + d_{SP\ CHG}^2 + d_{PHOS\ SCR}^2 \qquad (13)$$

WHERE: d_{TOT} = TOTAL SPOT DIAMETER MEASURED AT CRT VIEWING SURFACE

$d_{1st\ ORD}$ = DIAMETER OF FIRST ORDER CONTRIBUTION (MAGNIFICATION OF GRID 1/GRID 2 CROSSOVER)

d_{SPHER} = DIAMETER OF SPHERICAL ABERRATION CONTRIBUTION

d_{ASTIG} = DIAMETER OF ASTIGMATISM CONTRIBUTION

$d_{SP\ CHG}$ = DIAMETER OF SPACE CHARGE CONTRIBUTION

$d_{PHOS\ SCR}$ = DIAMETER OF PHOSPOR SCREEN CONTRIBUTION

Raising the final anode potential effectively provided more luminance for the same beam current. Utilization of a lower current, and a higher voltage operating mode meant that, for particulate phosphor screens, longer phosphor life was achieved. Also, at 12 kilovolts or more, space charge spreading effects became negligible with the beam currents and beam travel distances found in miniature CRTs. However, the higher anode potentials meant a stiffer beam for the magnetic deflection yokes to steer. Therefore, new, higher current, low inductance/low capacitance deflection yokes were designed [10]. These new yokes also run cooler at higher deflection coil currents. The deflection yokes are driven by appropriate highly linear deflection electronics circuitry that can support the high video line rates, often needed for VPD applications.

Maximum focus lens diameters and gun limiting apertures have been successfully implemented in an integrated CRT design [17,18]. These improvements coupled with shaped faceplates, the implementation of dynamic focus correction into the CRT drive electronics, and lengthening the CRT slightly so that the deflection yoke assembly does not overlap the focus lens element [10], have effectively reduced aberrational/astimatism contributions to about 10-15 percent of the total spot size. This may represent a practical limit to a reduction of these contributions to spot size, and left only first order contributions and phosphor screen effects, where further reductions might be obtained.

The major factors that contribute to first order spot size are interrelated and expressed by Langmuir's equation (equation A3.19, reference [12]), as given here by equation 14. Its form is derived for narrow-angle beam assumptions; i.e., higher order contributions to spot size are negligible, because the radial displacement and angle of the beam are kept small [18]. Equation 14 then represents an upper limit for display performance (ignoring phosphor screen contributions), and, once a CRT has been optimized for a given set of operating characteristics, indicates the only possible ways, that higher current densities (more luminance for a given spot size) can be achieved. A closer look at equation 14 shows that there are essentially four parameters which may be varied to increase

$$P_s = P_c\,[(eV/kT) + 1]\sin^2\theta \qquad (14)$$

WHERE: P_s = PEAK CURRENT DENSITY AT SCREEN

P_c = PEAK CURRENT DENSITY AT CATHODE

V = FINAL ACCELERATING POTENTIAL

T = CATHODE TEMPERATURE

e = ELECTRONIC CHARGE

k = BOLTZMANN'S CONSTANT

θ = MAXIMUM HALF-ANGLE OF CONVERGENCE AT CRT SCREEN

peak current density at the phosphor screen; (1) increase the acceleration potential, (2) increase the angle of convergence at the screen, (3) reduce the operating temperature of the cathode, and (4) increase the peak emission current capability of the cathode. The acceleration potential has already been raised, and 13 kilovolts appears to be a maximum reliable operating potential. Modifications to the triode and focus lens design within the allowed dimensional limits of miniature CRTs, have also brought the angle of convergence to near its absolute maximum. Therefore, the designer is left with the option of reducing the object beam diameter. A practical way to accomplish this reduction is to reduce the G_1 aperture (see Figure 21), which increases the peak cathode loading. Projections for peak cathode loading in advanced CRT designs currently predict peak emission densities of 5 to 10 amps/cm^2, which is well above, that which can be obtained for standard oxide cathodes, providing reasonable life characteristics [18]. The search for cathode designs, that can meet these operating requirements is perhaps the chief remaining breakthrough to be achieved for miniature CRTs with the performance needed to accommodate most VPD applications.

The remaining area left for obtaining performance improvements is the phosphor screen characteristics. A significant impediment to past performance improvements in this area, had been knowing what the actual beam diameter was, just prior to beam impact on the phosphor. This dimension could then be compared to the spot size of light, emanating from the phosphor, after impact of the beam. At the start of the VPD effort, AAMRL had a significant parallel effort with AT&T, Bell Laboratories to develop improved versions of single crystal phosphors (SCP) that had superior thermal characteristics and did not suffer coulombic degradation which causes diminished light output for the same power input. Their cathodoluminescent qualities, also produced a spot of light that was almost the same diameter as the electron beam spot, impinging on the rear surface of the phosphor [04]. While these materials exhibit superior contrast at all drive levels, they have not produced the external luminous efficiencies originally hoped for. However, they have proven to be very significant design tools, and have provided important technical insight into the improvement of particulate phosphor CRT screens. Fabricated in split-screen versions, where one-half of the CRT screen has an activated SCP, and the other half a given formulation of a particulate phosphor the CRT designer could then know the contribution to spot size made by the particulate phosphor by measuring the change in spot size as the electron beam scanned across the two media. This has allowed the importance of a number of particulate phosphor parameters to be investigated, including; (1) the optimization of phosphor thickness, and therefore, its transparency to light generated by the e-beam for a given acceleration potential, (2) the optimization of grain size mixtures, to achieve high resolution, high luminous efficiency, good thermal conductivity and good operating life characteristics, and (3) the evaluation of phosphor deposition processes that yield good percent coverage of the screen, and optimized phosphor grain packing. These processes, although much refined, are still undergoing further improvement.

Figure 22 depicts the performance gains achieved for an improved miniature CRT developed as part of a joint AAMRL/Hughes Aircraft Company development program. For the reference CRT, shown in Figure 22, measured at 50 percent peak luminance line widths of 0.75 mils (19 microns) and 1.0 mils (25.4 microns), luminances of 1100 and 1300 ft.-Lamberts were obtained. For the improved CRT measured at the same line width conditions, peak line luminances of approximately 4300 and 7350 ft.-Lamberts respectively, were achieved.

The peak line luminance FOM is useful for indicating improvements made for operating conditions that might be expected of an HMD for the presentation of symbology under daylight viewing conditions. CRTs of this type are also expected to provide similar improvements for raster imagery presentations. However, comprehensive CRT measurement at different spatial frequencies and luminance conditions, made with CRT drive electronics which are capable of preserving the inherent performance of these new CRTs, were not available in time to include here.

Operating a miniature CRT at the high luminance, high current levels indicated in Figure 22 does exact a toll, primarily a shortened operating life. The current family of improved CRTs is expected to provide only 70 to 80 percent of its peak performance after 400 hours of operation. The prime culprit appears to be the emission characteristics/life of the cathode, and not coulombic degradation of the phosphor. Improved cathode materials and designs, such as new low noise variants of dispenser cathodes, which operate at power levels that do not produce severe grid emission, are being sought, but no clear replacement for refined high grade oxide cathodes has been firmly established. At the same time, further iterations in electron gun design and phosphor screen compositions are expected to produce further improvements of at least 20 percent above the CRT performance depicted in Figure 22 by the first half of 1988.

INTEGRATED HELMET SYSTEM (IHS)

GENERAL CONSIDERATIONS

During the VPD HMD development it was determined that a successful VPD design effort would require the design of a helmet which optimized the integration of the optics and image source components about the head. Other requirements, such as the need to demonstrate a helmet system that protected the human in hostile chemical and biological environments, also had an impact on the types of helmet systems that were evolved. Indeed, probably almost all HMD applications, including narrow FOV HMDs, would benefit substantially from a custom integrated helmet system design. A perfect example is the Kaiser, Inc. "Agile Eye" helmet system which incorporates a helmet position/orientation system and a HMD, which can, for two different design variants, provide a monocular visor projected display, with an instantaneous circular FOV of either 12 or 20 degrees. Because of the small FOV, this system was able to improve upon helmet weight and CG characteristics currently found in unmodified operational flight helmets intended for use in fighter aircraft.

For the VPD effort, the integrated helmet design attempted to provide the necessary operational safety while minimizing weight and optimizing CG, enhance the operation of VPD components, minimize the impact of environmental factors on the visual/auditory functions, and as possible, provide the

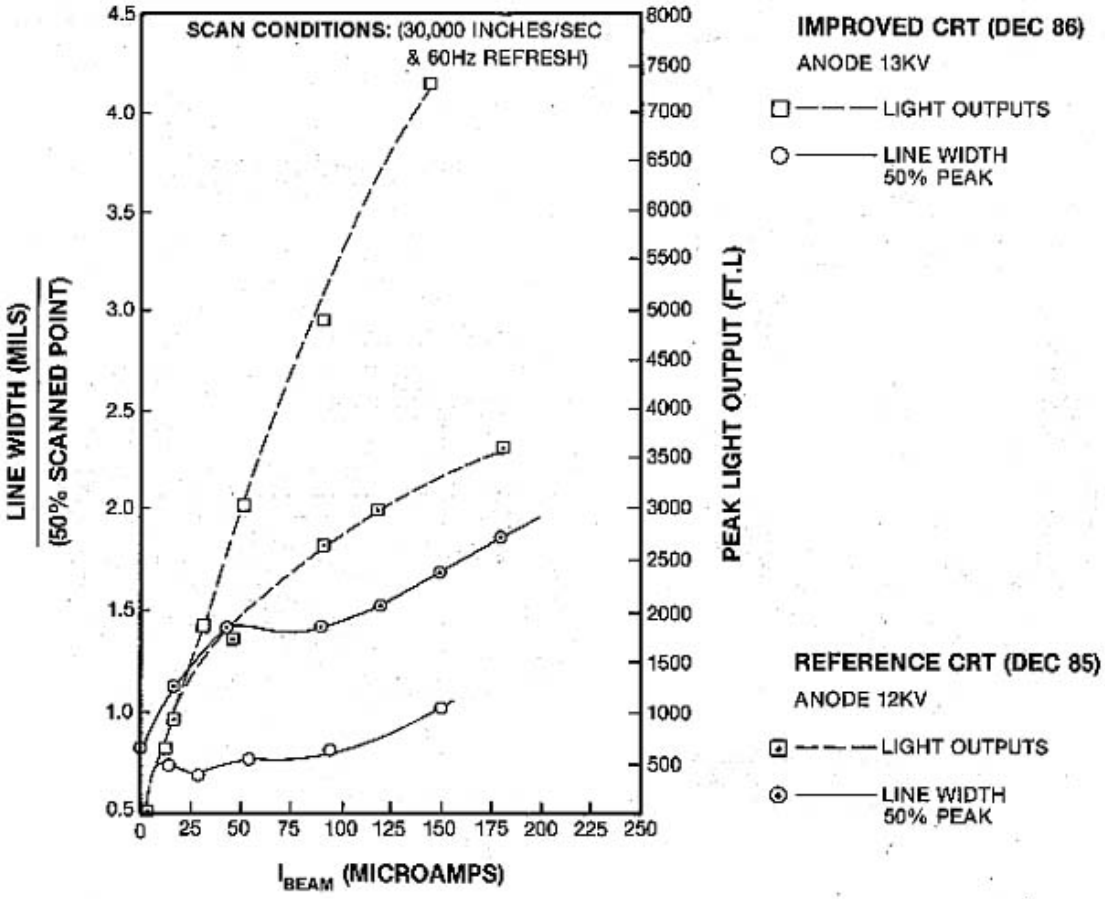

FIGURE 22
COMPARISON OF MINIATURE CRT PERFORMANCE IMPROVEMENTS

necessary comfort for extended periods of wear. Design features and considerations that proved to be most important to the successful integration of each optical system design were as follows:

1) The selection and performance of the HMD optics design

2) The helmet/optics head stabilization methodology

3) Helmet/optics interface issues affecting adjustment capability for the optics

4) Basic helmet design alternatives

SELECTION OF HMD OPTICS DESIGN/PERFORMANCE

The selection of a particular optical design configuration is just as important as its required performance in its effects on the effectiveness of the final system hardware. The selections made often affect head/helmet CG more than weight. Figure 23 illustrates the most feasible HMD optical system configurations. The location of the optical system's head-mounted image sources imply a particular relay optics design to bring the image to the human's eyes. Location 1, which indicates a mounting location anywhere across the top or crown of the helmet, permits a reasonably simple and short relay optics, but results in a significant modification of the head/helmet CG and a "topheavy" feeling. Locations 2 and 3 still normally utilize relay optics of modest complexity, but are located lower on the head, and have a lesser, but still significant (especially location 3) effect, on head/helmet CG. A problem with location 2, is that it normally occludes peripheral vision, and therefore, necessary peripheral motion cues that are important to military pilots during the performance of low level and hovering flying tasks. One noteworthy advantage of location 3 is that it provides the optimal path for achieving large HMD vertical FOVs. However, it also presents a more difficult problem for eliminating stray images emanating directly from the relay optics to the eyes. Location 4 provides an optimal location for achieving "operationally positive" modifications to the head helmet CG, but results in excessive helmet weight for a given FOV. This happens because, in supporting the high resolution/large FOV operating conditions, either heavy refractive optics or fiber optic image conduits, must be used to relay the CRT images to the eyes. Location 5 presents a compromise that permits shorter fiber optics conduits or reasonably-sized high efficiency refractive relay optics to be used, while still resulting in a head/helmet CG modification that is altered in a desirable direction. Normally, location 5 employs a refractive relay optics design, that carries the CRT image up and over the ear, to the

display combiner without significantly occluding peripheral vision. The VPD helmet systems described in this paper have made use of only mounting locations 1, 3, and 5.

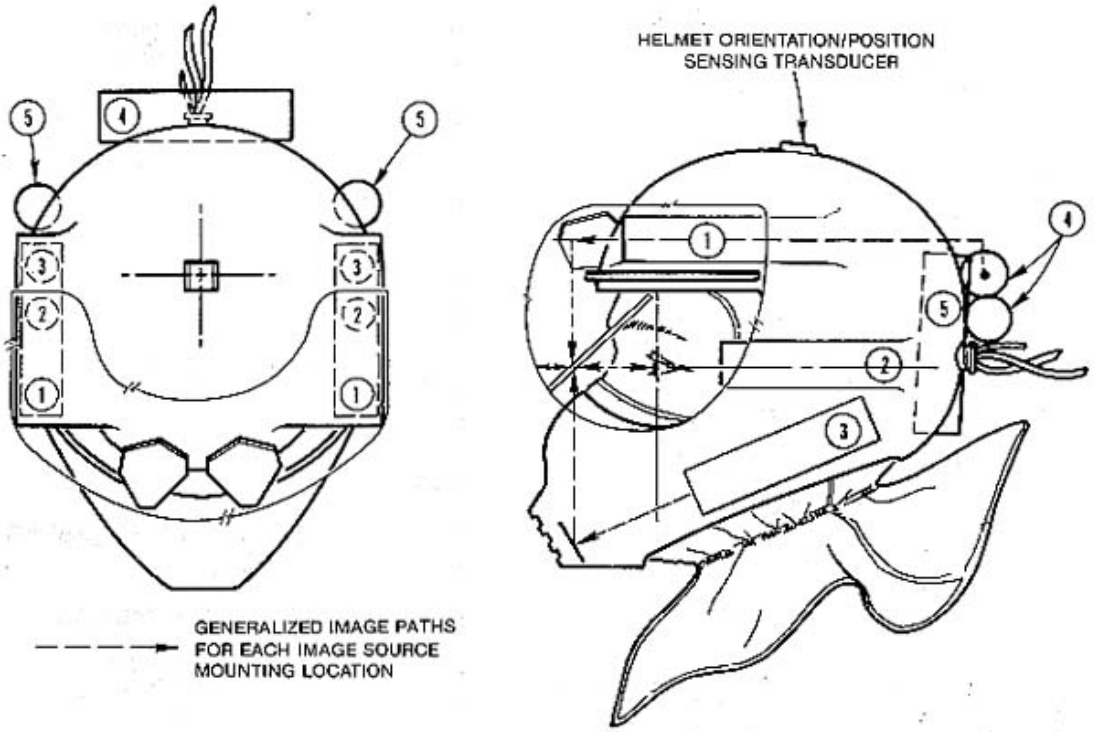

FIGURE 23
IES MOUNTING LOCATIONS FOR VPD HMD COMPONENTS

The alteration of head/helmet CG is a critical parameter affecting the selection of the HMD optical design. The VPD program is now in the breadboard stage, where designs and materials are fluctuating, and it has not been possible to predict head/helmet CG modifications, based upon dimensional predictions of helmet relationships and the densities of the materials used. Instead, the breadboards are being completed, and then the Mass Properties Instrument built by Space Electronics, Inc. and located at AAMRL, is being used to measure the center of mass/gravity and determine mass moments and products of inertia. These measurements will then be used to predict CG based upon desired modifications to a given design, as improved systems are fabricated for operational testing.

One additional important consideration that can have a direct impact on integrated system design is the susceptibility of the optical design to stray light. Stray light paths can produce unwanted reflections of ambient structures within the HMD FOV that compete in a very objectionable manner with the display imagery. The two major factors affecting this problem are the selection of the image path for a particular optical design, and the eye relief provided for the display's combiner. Greater eye relief leads to more severe problems. Light originating from behind helmet, or overhead often presents the most severe problem. These problems, cannot be fully corrected through the use of antireflective coatings, and usually require the addition of opaque sections around the optics or the extension, and/or thickening of the helmet shell/liner combination, to block objectionable stray light paths.

HELMET STABILIZATION

The inclusion of relatively large exit pupils and IPD adjustment in the optics/helmet design is not enough to insure, during normal viewing/operating conditions, that the helmet system will not move sufficiently, thus vignetting a portion of the display's instantaneous FOV. Therefore, some sort of stabilization scheme must be incorporated. While there are several options, the approach chosen for the VPD HMD effort was one which incorporated an oxygen mask that could be rigidly held with respect to the rear portions of the helmet, as suggested by the helmet concept illustrated in Figure 23. This arrangement allows a rigid lever arm to be formed, between the nape of the neck and the bridge of the nose, that resists both vertical and sideways movement of the helmet. This scheme has proved to be very successful, and eliminates most helmet position hysteresis following rapid head-slaving movements. Comfort/facial access must also be considered, and most designs allow a mask design that can be opened to one side, although a design employing mounting location 3 sometimes effectively eliminates this option. An additional benefit of this type of helmet design is that the optical design and associated adjustment requirements may, through the rigid mask design, be referenced to the bridge of the nose. This scheme offers one of the most stable, reliable reference methods for the eyes, given human anatomical characteristics.

HELMET/OPTICS INTERFACE ISSUES

Three types of adjustments must be provided to properly position the optics with respect to the eyes: horizontal (IPD), vertical, and depth (eye relief) adjustments. IPD requirements have already been discussed in sufficient detail, except to stress that the helmet system must permit separate independent adjustment of each monocular, and the adjustment must be parallel and colinear to insure that misalignment of the binocular scene does not occur for different adjustment points, anywhere in the allowed range of movement. Vertical and depth adjustments imply a personalized custom mounting scheme. For the VPD designs, this has been accomplished through the use of a custom "thermal plastic liner (TPL)," developed by Gentex, Inc., and inflatable air bladders whose internal pressure may be controlled through the use of a miniature helmet-mounted finger pump and valve assembly, operated while viewing alignment patterns on the display optics. Investigations aimed at determining whether this mounting/adjustment technique provides the desired amount of stability and comfort are ongoing. Major features of the VPD IHS are depicted in Figure 24.

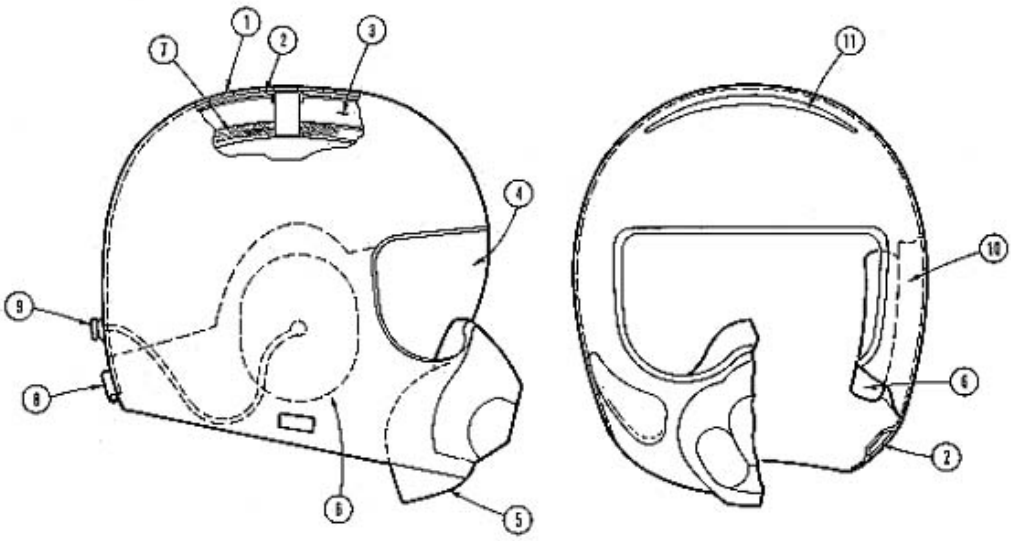

FEATURES:

1. LIGHT WEIGHT KELVAR SHELL
2. PLENUM (PART OF LAYERED SHELL, AIR DUCT FOR VENTILATION)
3. STYROFOAM LINER
4. PROTECTIVE POLYCARBONATE VISOR
5. OXYGEN MASK ASSEMBLY
6. HEADPHONE EAR CUP ASSEMBLY
7. TPL CUSTOM FITTED LINER
8. AIR HOSE CONNECTOR
9. FINGER AIR PUMP FOR EARPHONE/ DISPLAY ADJUSTMENT BLADDERS
10. EARPHONE ADJUSTMENT BLADDER
11. VERTICAL ADJUSTMENT BLADDER

FIGURE 24
IHS HELMET SYSTEM CHARACTERISTICS

HELMET DESIGN ALTERNATIVES

The integration of the VPD optical prototypes into representative military headgear systems, using advanced lightweight Kevlar shells, has resulted in a number of interesting helmet configurations. These designs were driven by a number of considerations, including the desire to achieve the largest FOV/exit pupil for a given HMD design approach, expected operational conditions in flight test aircraft, abuse that normal personal equipment undergoes, difficulties with doning complex helmet systems of this type, safety, particularly for rapid egress from a damaged air vehicle, and the physical properties of the designs as discussed for CG, etc. Several of the more interesting IHS breadboards are presented here in Figures 25, 26, and 27 for systems 3, 2, and 5 respectively, from Table 2.

The Dual Mirror system, Figure 25, provides the second largest FOV of any of the designs and achieves the lowest optical system weight. Its design is closely integrated with the oxygen mask, which aids in referencing the optical alignment to the eyes, but complicates the ability to remove the mask when the helmet is worn. The close integration with the mask, led to a rear entry design, which eliminates cumbersome, overhead doning of the helmet and streamlines the placement of the oxygen mask and optics over the face. The folds and contours of the helmet shell at its base provide rigidity, while reducing the number of Kevlar plys which must be used. The thickness of the helmet liner has been increased to provide improve headform acceleration performance, and to reduce unwanted reflections in the beamsplitter due to stray light originating from above and behind the helmet.

The Catadioptric system, shown in Figure 26, has a 10 percent smaller FOV than the Dual Mirror system, but provides much greater eye relief and improves image source transmission efficiency by a factor of three. The improved eye relief and image source/optics integration achieves a design, that permits the optics and image source assembly, to be detached from the helmet and stowed in the cockpit. Such a design prevents an expensive assembly from becoming a piece of personal equipment subject to greater abuse. However, this capability is gained at the expense of increased helmet weight and rotational moments, and stray light problems resulting from a large combiner/beamsplitter assembly located a relatively large distance from the helmet. Upward vision, in particular, is greatly restricted, to prevent severe overhead stray light problems.

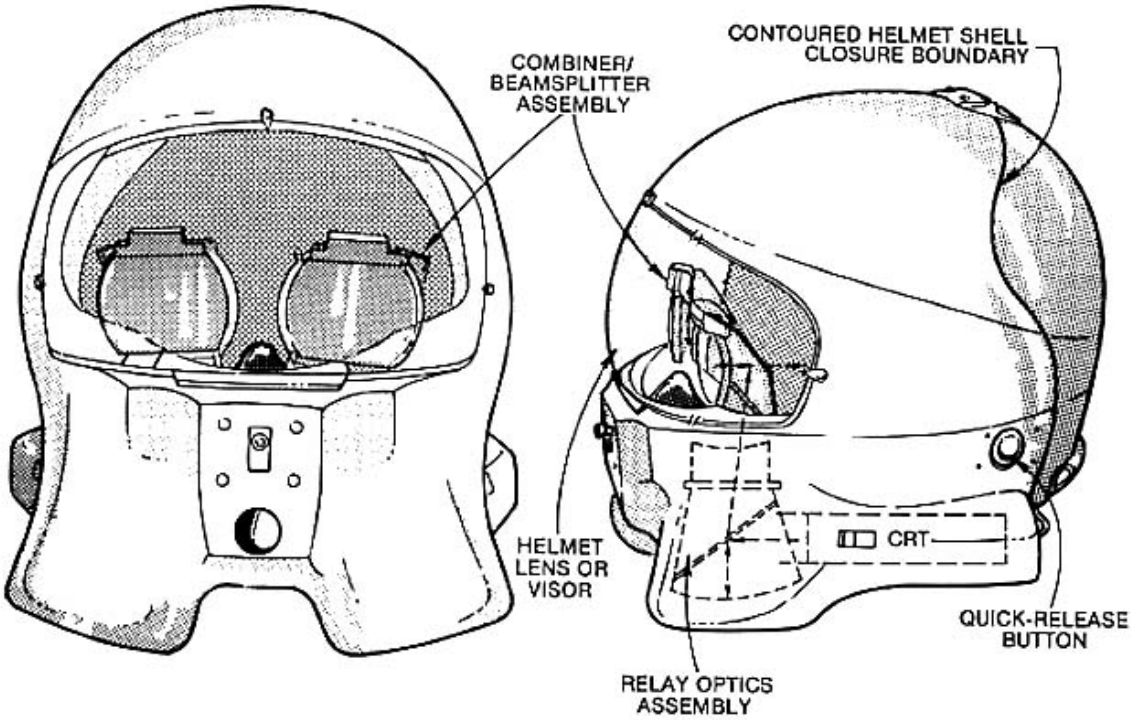

FIGURE 25
PROTOTYPE DUAL MIRROR OPTICS/HEADGEAR BREADBOARD

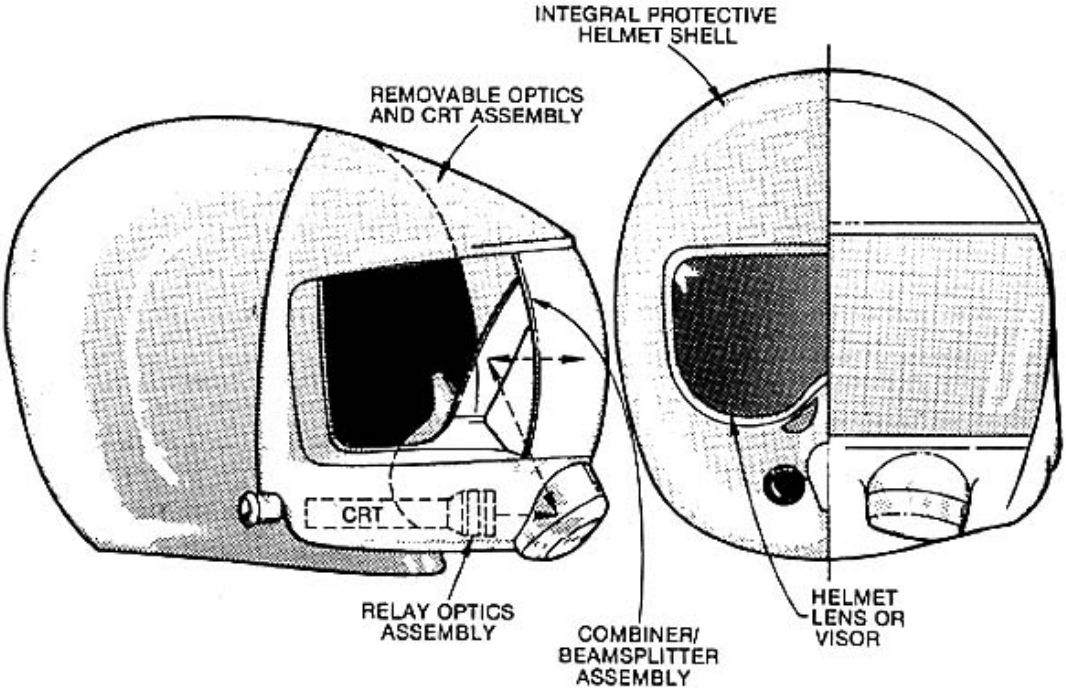

FIGURE 26
PROTOTYPE CATADIOPTRIC OPTICS/HEADGEAR BREADBOARD

The Off-Aperture system, shown in Figure 27, depicts yet another novel optical system/helmet design approach. This design locates the CRT image sources vertically, at the rear of the helmet, to improve the head/helmet CG characteristics. This location precludes a rear entry design, but its lack of direct involvement with the stabilizing oxygen mask permits the mask to be removable when the helmet system is worn. The design utilizes a high efficiency refractive optical design to transport the CRT image to the combiner mirror viewing surface. This permits achieving image source transmission efficiencies of 80 to 85 percent, and also allows greater ambient transmission, while providing good image contrast. Excellent eye relief and clearance are also characteristics of this design. However, system weight is high, although use of plastic optics and other system refinements could greatly improve this condition.

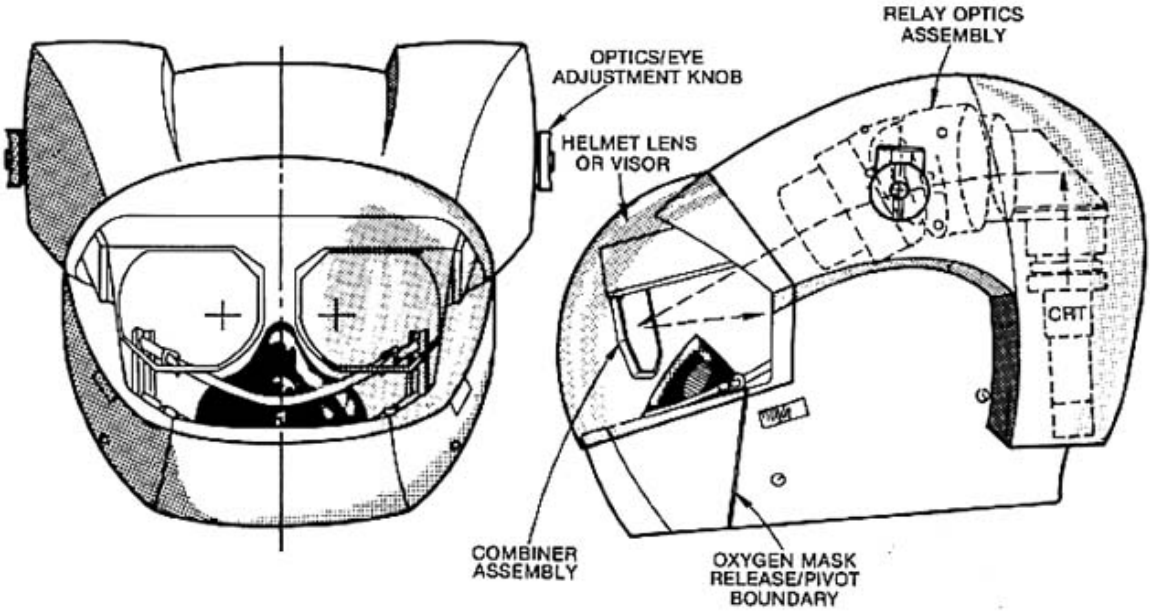

FIGURE 27
PROTOTYPE OFF-APERTURE OPTICS/HEADGEAR BREADBOARD

IMAGE SOURCE DRIVE ELECTRONICS

Although sometimes given secondary consideration, the image source or CRT drive electronics, which controls the binocular optics CRTs as shown in Figure 1, are extremely important components, for VPD HMD applications. Their performance is a fundamental factor in the modulation transfer function (MTF) that the CRT can attain. The drive electronics also control most of the important factors relating to the customization/integration of the CRT formats with respect to the optical design. For this paper, a relevant discussion of design issues need only concern itself with those factors, which are critical to the proper integration of the CRTs and their image formats, with the optics and headgear. The issues of greatest importance are felt to be:

1) CRT-to-optics mapping correction

2) Derotation

3) Electronic alignment

4) Other CRT X:Y Deflection issues

5) Power Supply performance

CRT-TO-OPTICS MAPPING CORRECTION

As the discussion associated with Figure 17 has already explained, the F-theta mapped optics produces a type of pincushion distortion which must be corrected by implementing barrel distortion of the CRT image format. As mentioned in [01,02], partially overlapped optics, which have their optical axes turned out, can also produce mild perspective distortion which is trapezoidal in form. Ordinarily, such distortions could be specified by the optical designer, and the system designer could insert the appropriate corrections using a truncated polynomial approximation with sufficient correction terms in dedicated correction circuitry associated with the deflection subsystem. However, given the variation experienced between individual CRT electron optics, the deflection yoke, and the physical alignment of the deflection yokes with the electron optics during the manufacturing process, these ideal conditions cannot be obtained. Therefore, each CRT must be calibrated for the particular HMD design, and the correction coefficients recorded and entered into the control elements of the CRT

electronics. Normally, correction terms to third order are sufficient, which is fortunate, since each additional order implies a commensurate increase in deflection electronics bandwidth [22]. The correction terms most often used are listed in Table 6. Their respective effects on the CRT's X and Y axis can be found in reference [07].

TABLE 6
CRT MAPPING CORRECTION TERMS

X-AXIS DEFLECTION	Y-AXIS DEFLECTION
$X^2, Y^2, XY^2, X^2Y^2, X^3, Y^3$	$XY, X^2, Y^2, X^2Y, X^2Y^2, X^3, Y^3$

DEROTATION

For HMD applications it is sometimes desired that the display format be maintained at the proper orientation with respect to the aircraft's or simulator's roll axis, regardless of the roll orientation of the head, and therefore, the display presentation. Maintaining the proper orientation is usually accomplished through the use of roll sensing provided by a helmet orientation/position measurement system whose roll output is fed directly to the drive electronics or, if a 2 or 3-dimensional graphics processor is being used, directly to that subsystem. As shown in Figure 6, for a partially overlapped, binocular system, the visual center of the optics is off center from the CRT, and the derotation to be performed involves both a translation and derotation on the CRT. Particular characteristics are set by the VPD design conditions. This correction must be performed at the field rate, at which the display is refreshed. The resolution to which this correction must be accomplished has already been discussed in sufficient detail in reference [22]. Due to noise and bandwidth considerations in the display deflection electronic's subsystem, and system implementation issues concerning the use of sensor systems, derotation of imagery is usually performed by the CRT electronics. Derotation of vector graphic symbology is best accomplished at its source, and then transmitted in corrected form to the CRT drive electronics.

ELECTRONIC ALIGNMENT

As previously discussed, some electronic alignment must be performed, to correct for residual errors in the alignment of the optics and in the reproducible characteristics of individual CRTs. Although complex alignment patterns have been employed to carefully check the exact horizontal/vertical alignment of partially overlapped binocular displays, the simple patterns shown in Figure 28a and 28b are usually sufficient. The pattern shown in Figure 28a has been recommended in the literature, however the pattern shown in Figure 28b appears to produce better results, because there are no identical structures presented to both eyes which the eyes might attempt to converge to identical retinal correspondence points. In addition, the pattern shown in 28b provides exact endpoint match capability, not provided by some of the open reticle patterns, which provide only horizontal lines to one eye and vertical lines to the other. Also, results obtained at AAMRL show that these patterns must be flashed in order to prevent improper convergence of the display. A duty cycle pattern that seems to work well is to repetitively flash the patterns on for about 75 milliseconds, followed by a 100 to 125 millisecond dark period.

OTHER CRT DEFLECTION ISSUES

In addition to issues relating to CRT X:Y deflection quality, a number of other issues are deserving of some discussion. Due to the high resolution magnified CRT format imposed by the VPD FOV conditions, where the same image point is transmitted to each eye through different portions of a partially overlapped optical system, on-axis deflection linearity is critical. Linearity is usually specified to be in the range of 0.5 to 0.25 percent. To achieve such linearity with miniature CRTs, a class-A linear deflection amplifier design is normally required. Class A amplifiers cause heat dissipation to become an important design issue. VPD CRT design which stresses higher acceleration potentials and, therefore, stiffer e-beams, exacerbates this problem. To support this performance, low capacitance cabling and low inductance/capacitance, high current deflection yokes using only ferrite cores are employed. These requirements, coupled with the desire to achieve small dimensional sizes for the electronics, often requires the use of conductive liquid cooling, rather than convective air cooling for the CRT electronics.

Also, as can be observed from Figure 6, the CRT is overscanned in the horizontal direction to (1) obtain the largest format possible for the normal 4:3 aspect ratio, and to (2) ease the optical design problem. To prevent damage at the edge of the CRT caused by electron beam heating, the beam must be blanked (turned off) automatically at a given radial distance, using an operating mode normally referred to as "circular blanking". The extinction of the e-beam is controlled by the magnitude ($|X+Y|$) of its radial distance from the deflection center of the CRT, based upon CRT quality area size and any additional deflection correction control that is active. There are several methods employed to accomplish circular blanking, however, methods that employ slow square root circuitry are to be avoided.

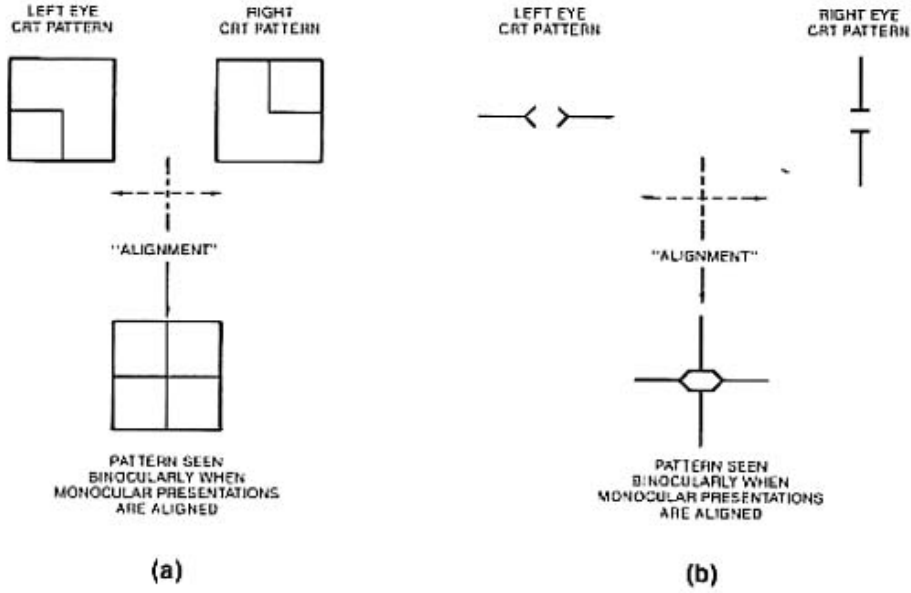

FIGURE 28
BINOCULAR DISPLAY ALIGNMENT PATTERNS

POWER SUPPLY PERFORMANCE

The HMD optics magnify the CRT faceplate imagery, from 8 to 19 times that of the original imagery. Magnifications of this order are sufficient to make electron beam spot noise, raster line jitter and drive electronics power supply noise both noticeable and objectionable. This makes power supply noise and regulation specifications very important.

The interaction of the CRT drive electronic's power supply noise and ripple with the display imagery, can produce complex effects. These artifacts produce movement of the display imagery visible to the human operator, depending upon their frequency and amplitude as a function of angular subtense on the display. This is particularly true for military power supplies, that utilize high frequency switching designs. As an example, consider the implementation of a 1225 line, 2:1 interlace scan format on an HMD with a 50 degree horizontal FOV. The scan line "on time" for a 1225 line rate is approximately 23.8 microseconds, which implies that one degree on the display equals about 0.5 microseconds. Since visual contrast sensitivity peaks at about 3 to 4 cycles per degree, a switching power supply with a ripple frequency of 6 to 8 megahertz has a switching frequency that could cause cyclical patterns where the eye is most sensitive. Alternately, a switching supply operating at 500 kilohertz, may be sufficiently removed, if ripple amplitude is low enough, to moderate such effects. The point here is that interactions of this type should be thoroughly investigated for all anticipated operating conditions.

The ability to obtain the needed performance is, in turn, dependent upon the specification of a reasonable set of CRT voltages, adjustment ranges for those voltages, and the maximum operating currents that are allowed. Table 7 provides a set of specifications for the latest CRT designs that provide operating margins which permit minimal power supply noise and regulation requirements to be met.

TABLE 7
CRT DRIVE ELECTRONICS POWER SUPPLY REQUIREMENTS FOR IMPROVED STD BIPOTENTIAL GUN CRT

PARAMETER	VOLTAGE VOLTS MIN	VOLTAGE VOLTS MAX	CURRENT MICROAMPS MIN	CURRENT MICROAMPS MAX	RIPPLE AND NOISE	REGULATION
ANODE (SCREEN)	10,000	13,500	0.0	300	≤0.05%	≤0.5%
G_3 (FOCUS)	1,000	3,000	0.0	1,000	≤0.05%	≤0.1%
G_2 (ACCELERATOR)	500	1,500	0.0	100	≤ 0.05%	≤0.1%

References

[01] Buchroeder, Richard A., Helmet-Mounted Displays, Tutorial T2, 21 May 1987, Society of Photo-Optical Instrumentation Engineer's 1987 Technical Symposium Southeast on Optics, Electro-Optics, and Sensors.

[02] Buchroeder, Richard A., An Optical Analysis of the Farrand VCASS Helmet-Mounted Display, Optical Design Service under contract to the US Air Force Armstrong Aerospace Medical Research Laboratory, Wright-Patterson AFB OH, 1983, AFAMRL-TR-83-072.

[03] Buchroeder, Richard A., Seeley, G. W., and Vukobradatovich, D., Design of a Catadioptric VCASS Helmet-Mounted Display, Optical Sciences Center, University of Arizona under contract to the US Air Force Armstrong Aerospace Medical Research Laboratory, Wright-Patterson AFB OH, 1981, AFAMRL-TR-81-133.

[04] Berkstresser, G. W., Shmulovich, J., and Wittenberg, A. M., Single Crystal Phosphor Development, AT&T Bell Laboratories under contract to the US Air Force Armstrong Aerospace Medical Research Laboratory, Wright-Patterson AFB OH, 1987, AAMRL-TR-87-041.

[05] Furness, Thomas A. and Kocian, Dean F., Putting Humans in Virtual Space, The Society for Computer Simulation, Simulation Series, Volume 16, No. 2, Pages 214-230, San Diego, CA, January 1986.

[06] Furness, Thomas A., The Effects of Whole Body Vibration on the Perception of the Helmet Mounted Display, Ph.D. Thesis, Volumes I and II, University of Southampton, England, 1981.

[07] Holmes, Richard E., Digital Remote Control for Matrixed Simulator Visual Displays, Proceedings of the 1987 Image Conference IV, June, 1987.

[08] Infante, C., Ultimate Resolution and Non-Gaussian Profiles in CRT Displays, Proceedings for the Society for Information Display, Volume 27, No. 4, 1986.

[09] Magarinos, Jose R. and Coleman, Daniel J. Holographic Mirrors, Society of Photo-Optical Instrumentation Engineer's, Applications in Holography, SPIE Vol. 523, 1985.

[10] Marci, Henry O., Miniature CRT Deflection Yoke Improvement, Syntronic Instruments Inc. under Contract to the US Air Force Armstrong Aerospace Medical Research Laboratory, Wright-Patterson AFB OH, Contract No. F33615-82-C-0513, 1986.

[11] McCauley, Daniel, Muller, Robert, and Brindle, James, JVX (Joint Services Vertical Lift Aircraft) Head Protection and Helmet Mounted Device Trade Study, Aircraft and Crew Systems Technology Directorate, Naval Air Development Center, October 1984.

[12] Moss, Hilary, Narrow Angle Electron Guns and Cathode Ray Tubes, New York, NY, Academic Press, 1968, pp 145 - 166.

[13] Martin, Wayne L., and Warner, Debra, The Use of a Virtual Cockpit in a Simulated Helicopter Attack Mission (Preliminary Observations), US Air Force Armstrong Aerospace Medical Research Laboratory, Wright-Patterson AFB OH, 1985, AFAMRL-TR-85-301.

[14] Rancourt, James D., Optical Thin Films: Users Handbook, New York, NY, Macmillan Publishing Company, 1987.

[15] Rancourt, James D., Anti-Halo Coatings for Cathode Ray Tube Faceplates, Proceedings of the Society for Information Display, Volume 25, No. 1, 1985.

[16] Radar Systems Group, Helmet Mounted Visor Display Study, Hughes Aircraft Company, Under Contract No. F33612-C-85-0513 for the US Air Force Armstrong Aerospace Medical Research Laboratory, Wright-Patterson AFB OH, 1986, HAC REF NO. G0942.

[17] Sanford, Emil, and Seats, Peter, Miniature CRT Improvement Program Study, US Armstrong Aerospace Medical Research Laboratory, Wright-Patterson AFB OH, 1983, AFAMRL-TR-83-075.

[18] Sauerborn, J., Freeman, J., Hesse, K., and Sluzky, E., Performance Improvement of Miniature Cathode Ray Tubes, under Contract to the US Air Force Armstrong Aerospace Medical Research Laboratory, Wright-Patterson AFB OH, Contract No. F33615-82-C-0513, 1987, AAMRL-TR-87-062.

[19] Self, Herschel C., Optical Tolerances for Alignment and Image Differences for Binocular Helmet-Mounted Displays, US Air Force Armstrong Aerospace Medical Research Laboratory, Wright-Patterson AFB OH, 1986, AAMRL-TR-86-019.

[20] Shenker, Martin, Optical Design Criteria for Binocular Helmet Displays, 22 May 1987, Society of Photo-Optical Instrumentation Engineer's 1987 Technical Symposium Southeast on Optics, Electro-Optics, and Sensors, SPIE Proceedings Vol. 778.

[21] Smith, Warren J., Modern Optical Engineering, New York, NY, McGraw-Hill Book Co., 1966.

[22] Task, H. Lee, Kocian, Dean F., and Brindle, James H., Helmet Mounted Displays: Design Considerations, Advancement on Visualization Techniques, October 1980, AGARDograph No. 255.

[23] Task, H. Lee, and Verona, R. W., A New Measure of Television Display Quality Relatable to Observer Performance, US Air Force Armstrong Aerospace Medical Research Laboratory, Wright-Patterson AFB OH, 1976, AAMRL-TR-76-73.

[24] Williams, Charles S., and Becklund, Orville A., OPTICS: A Short Course for Scientists and Engineers, Malabar, Florida, Robert E. Krieger Publishing Company, 1984.