ASC:90-2873

VISUALLY COUPLED SYSTEMS (VCS): PREPARING THE ENGINEERING RESEARCH FRAMEWORK

by

DEAN F. KOCIAN

ARMSTRONG AEROSPACE MEDICAL RESEARCH LABORATORY
WRIGHT - PATTERSON AFB, OH

Abstract

This paper explores the development and impact of new visually coupled system (VCS) equipment designed to support engineering and human factors research in the military aircraft cockpit environment. VCS represents an advanced man-machine interface (MMI), whose superiority over the conventional cockpit MMI has not been established in a conclusive and rigorous fashion. What has been missing is a 'systems' approach to technology advancement that is comprehensive enough to produce conclusive results concerning the operational viability of the VCS concept and verify any risk factors, which might be involved with its general use in the cockpit. The overall system concept and the design of one important subsystem, a new militarized version of the magnetic helmet mounted sight, are discussed in detail. Significant emphasis is given to illustrating how particular design features in the hardware improve overall system performance and support research activities.

Introduction

The last six years of advanced military equipment development activity, and particularly the last four, have been marked by a renewed interest in the application of visually coupled system (VCS) technology to the military aircraft cockpit. Not since the early to mid 1970s has the activity level been so intense for militarized versions of this technology. Much of the renewed developmental activity has, rightly, concentrated upon the helmet mounted display portion of the VCS. This fact is demonstrated by new helmet mounted displays (HMDs) from such manufacturers as Hughes Aircraft, Kaiser Electronics, GEC, and Honeywell, and DoD activities like the Army LH Helicopter Program, the Air Force F-16 Night Attack Program, and the joint Navy-Air Force INIGHTS Program. The emphasis on HMD design (particularly its size and weight) is because it has been a major performance-limiting factor to the widespread safe use of the technology in ejection seat aircraft. However, the successful integration of VCS technology into the cockpit includes the solution to a number of utilization and performance problems that cross the boundaries of many technical disciplines. A few of these are:

1) Providing further insight into and perhaps some solutions to, the more important remaining HMD human factors problems. Among them are the establishment of appropriate instantaneous fields-of-view (FOVs) for specific categories of missions or vehicle types (which are defensible with statistically meaningful quantitative data), eye accommodation as it relates to viewing collimated see-through displays, and binocular rivalry issues (either between eyes or between the display and ambient imagery).

2) Providing a display with a visual interface supporting sensor-generated and computer-generated information that reduces operator workload and demonstrates quantifiable improvements in operator performance.

3) Solving the biodynamic interference suppression problem for the helmet display.

4) Providing complete day-night operability with one HMD system.

5) Providing a VCS with the necessary spatial and temporal bandwidth while maintaining modest head-borne weight and an equipment configuration that is compatible with current aircraft ejection seats and safe for rapid ground-egress in explosive vapor environments.

6) Providing a helmet display, image source, and image source electronics combination that optimizes their own interface, can be easily adjusted for variations in human and hardware parameters, and supports the display of computer-based and sensor-based information, such that the entire sensor/display subsystem is not display limited, and

7) Evolving a helmet mounted position and orientation tracking system that fully supports its own cockpit integration, its integration with other subsystems comprising the entire VCS, and provides a usable and reliable man-machine interface (MMI).

The above list, which should not be construed as exhaustive, represents a general first level list of interdisciplinary issues that, in the author's experience, have been observed to be important and need further investigation before one can feel reasonably secure about the general adoption of VCS technology for military aircraft. Items in one, two, and three represent the biophysical, ergonomic, and 'system' human factors issues for which appropriate instrumentation and testing is needed for clearer resolution of their significance. Items four and five relate to developmental issues for which addtional time and dollars will be needed to achieve adequate levels of performance, and to which development efforts, such as the one described in this paper, can make a serious contribution. Items six and seven directly address VCS functional and performance related issues that support state-of-the-art (SOA) advancements in both research-directed and production-directed systems development. Many system development issues have both a 'developer's' and 'user's' sense to them, and both require relatively equal time and resource commitment. Before valid technical positions can be legitimized, or the solution to parts or all of some of the above issues can be found or developed, it will be necessary to require partial or complete VCS testing in operational environments with hardware that embodies SOA capability. It can be argued that, in many instances, a 'best' approach to a 'best' solution is to have at hand SOA

hardware that has the required "programmability" to support engineering and human factors research and also the ruggedness to be operated in the final intended environment, in this case the military aircraft cockpit. References [02,05] have already described most of the requirements and system integration issues surrounding the head-mounted display and its immediate supporting hardware. This paper investigates some recent research and development activities at AAMRL involving the VCS electronics that directly support the helmet mounted components. The discussion covers the rationale surrounding their primary operational characteristics, their impact on the current state of VCS technology, and tries to demonstrate how some of the issues enumerated in one through seven above are being resolved.

A "Research-Oriented" Visually Coupled System

Figure 1 depicts one variation of a VCS system, the Virtual Panoramic Display (VPD). This system is designed to support all types of helmet-mounted displays (HMDs) using miniature cathode-ray-tube (CRT) image sources, including partially overlapped binocular displays. It provides the basic helmet tracking and display presentation capabilities. However, it also supplies the configuration programmability, interface flexibility, and self-contained data collection needed to support advanced research activities addressing the above mentioned utilization/performance issues. Beginning with the head-mounted components, the visual subsystem (HMD) may include either one CRT image source and one or two optical channels, providing a monocular/biocular display presentation, or 2 CRTs with dual independent optical channels making possible a true binocular presentation. The visual fields may be either fully or partially overlapped and may be aligned, using programmable electronics, permitting, if desired, the presentation of true stereoscopic images. The CRTs, employing, in most cases, narrow-band emission phosphors, may be any of the standard bipotential lens designs commonly available, or be of an advanced design including additional grid control elements. The CRTs are interfaced to specially-designed analog helmet-mounted display electronics (AHMDE) which "tailor" the displayed information to the requirements of both the HMD optics and CRT design. A major thrust of current visual display research for the military cockpit assumes that mission equipment package (MEP) data and sensor-generated information must be "fused", in part visually, in some optimal manner on the HMD to help improve the pilot's moment-to-moment situation awareness. Thus, the VPD AHMDE has been designed to support a range of anticipated video input combinations for sensor-generated and computer-generated visual information that can be displayed simultaneously on the CRT. Much of the displayed information must be changed and/or updated, based upon the pilot's instantaneous line-of-sight (LOS) and helmet position within the cockpit. To provide this function, a magnetic helmet mounted sight (MHMS) is included that provides both helmet attitude and position vectors. The newer version of the MHMS used for this VCS configuration can be programmed to compensate for certain environmental disturbances to which it is susceptible. To promote ease of programming and transition to-and-from ground-based and airborne research environments, a combination of Digital

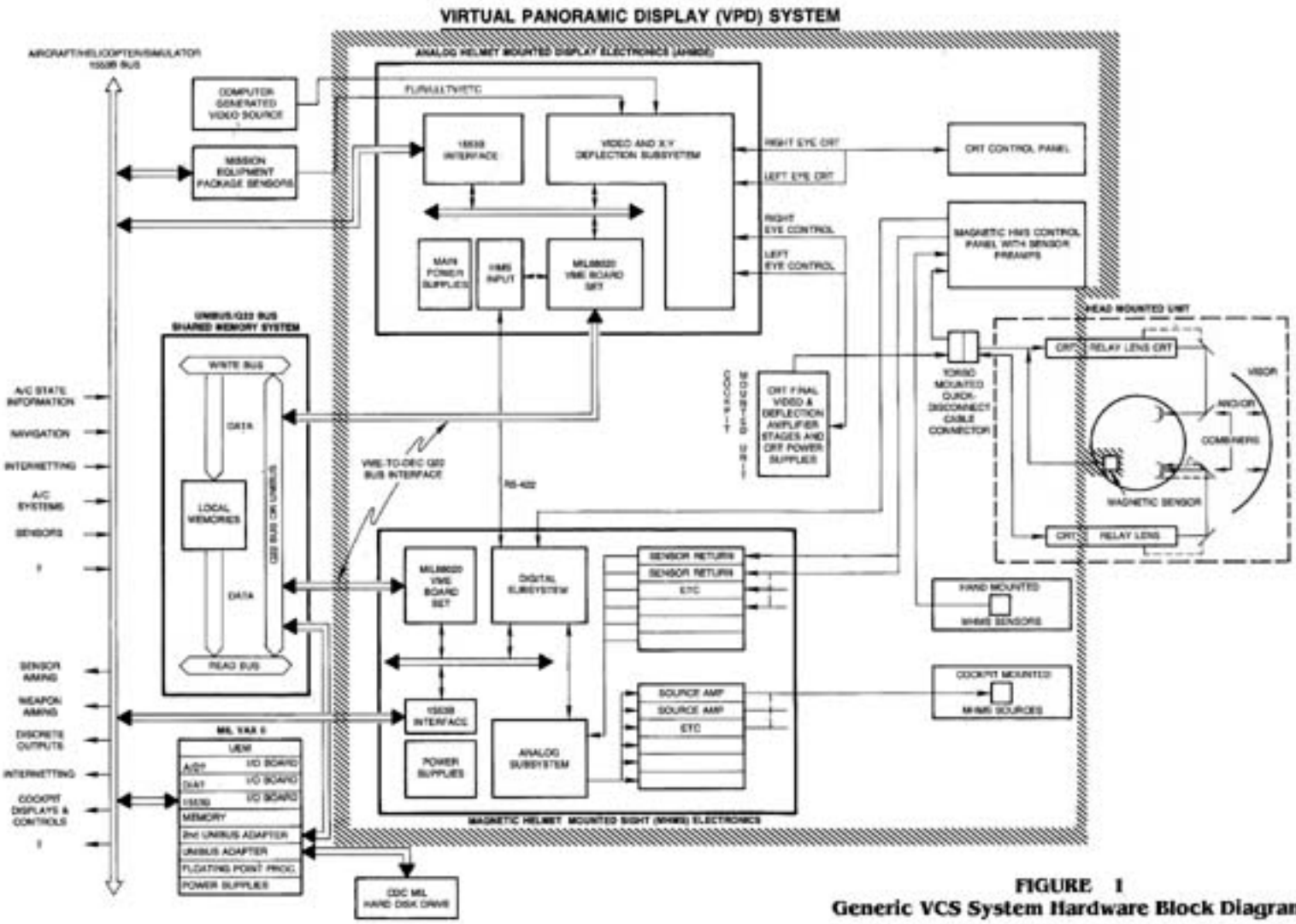

FIGURE 1
Generic VCS System Hardware Block Diagram

Equipment Corporation Q-Bus and UNIBUS processors and Motorola 68000 family VME processors have been employed as both imbedded and stand-alone processors. To facilitate data transfer beyond the limitations of the military 1553B data bus, a variety of high speed interfaces including a multi-port shared memory (MPSM), which exists in both laboratory and militarized form, were developed. The MPSM allows up to ten DEC or VME-based processors to simultaneously perform parallel read and write operations between each other. To facilitate non-volatile memory storage, militarized hard disks are available for the DEC-based processors and EEPROM for the VME-based processors. This architecture fosters ease of expansion when additional processing power is needed, and permits additional enhancements, such as auditory localization and physiological test battery monitoring, to be added to the basic VCS, as needed and available. The shaded area of Figure 1 represents the core components of the VCS electronics subsystem for most near-term VCS configurations. Due to length considerations, this paper will focus the remainder of the discussion on just the portion of the shaded region that includes the MHMS, emphasizing advancements that facilitate not only hardware performance, but also improve or facilitate the VCS interface and research activities. Some discussion in a similar vein relating to the helmet mounted display electronics can be found in [02].

The Helmet Mounted Sight "Providing a More Complete System Concept"

Many critical pilot activities involve, to some degree, the rapid acquisition of information, the accurate and fast positioning of display symbology depicting system state, and, after suitable cognition time on the pilot's part, the execution of one or more aircraft system state changes. If the man-machine interface (MMI) through which this interaction is being effected is a VCS, then the spatial relationships and positional accuracies of information portrayed on the HMD, as determined by the HMS position and orientation (P&O) tracking data, are very important. Not only must the quality of HMS attitude and position information be guaranteed to some known and repeatable baseline level of accuracy, but it is also desirable to be able to enhance the VCS's immunity to environmental disturbances to which the HMS or human operator are susceptible (at least in a 'signal-to-noise-sense' to a threshold near or slightly beyond the limits of system-aided human perception). The MHMS, despite the complexities of correcting for electromagnetic scattering, is still regarded as the HMS system of choice because of its rugged small transducers, immunity to other types of environmental problems associated with military vehicles, and the speed and accuracy of the six-degree-of-freedom (6DOF) orientation and position data that the MHMS can provide. Figures 2 and 3 depict the primary system elements and their interfaces for the new VPD MHMS and its functional organization.

The core of the improved MHMS system is its new P&O algorithms developed for AAMRL by Green Mountain Radio Research Company (GMRR), and the hardware parallel-processor architecture developed by the Kaiser Electronics subsidiary, Polhemus, Inc (PI). The new algorithms both improve system tracking accuracy and permit the effect of many environmental disturbances to be substantially reduced. The primary P&O tracking algorithm is a minimum variance linear estimator (MVLE). The MVLE makes direct use of the magnetic-field characteristics and satisfies three objectives: (1) obtaining a least-squares best fit to the measured magnetic fields, (2) providing minimum expected mean-square error in P&O, and (3) providing maximum-likelihood P&O estimates. Under conditions of very rapid and continuous head movements, the MVLE algorithm cannot provide convergence to an accurate P&O solution. As shown in Figure 2, 'supervisory' software checks for such conditions, and, when detected, switches the P&O solution process to a nonlinear estimator (NLE) algorithm. The NLE makes direct, noniterative estimates of P&O, and, while its

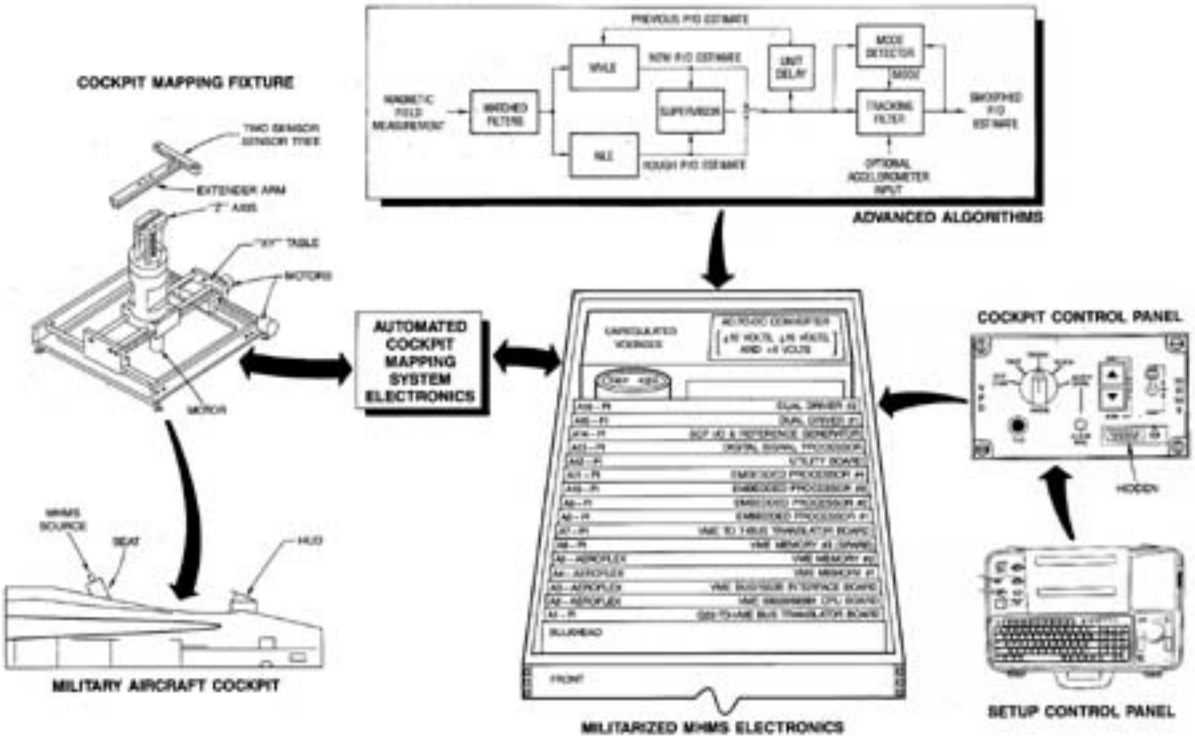

FIGURE 2
VPD MHMS System Concept

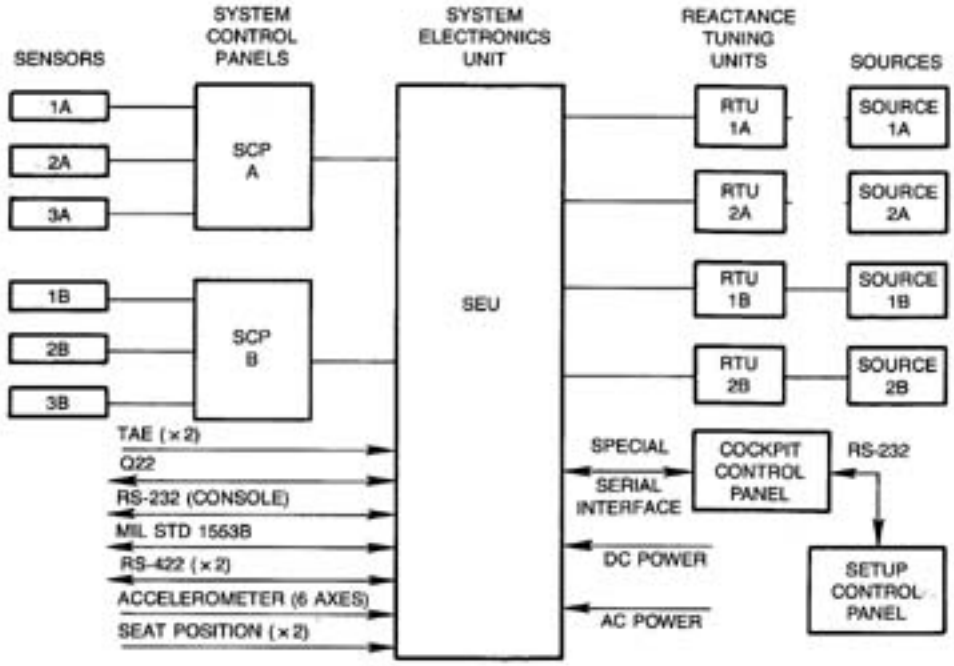

FIGURE 3
VPD MHMS Component Block Diagram

accuracy is not as great as the MVLE, its stability is absolute. Thus the MVLE and NLE are complementary. Under normal operating conditions, the MVLE provides the most accurate P&O estimates, while the NLE ensures correct initialization and recovery from very large and continuous step inputs and power disruptions. Signal oversampling and a 'matched filter' are used on the front end to obtain the needed signal-to-noise ratio (SNR) and minimize head-mounted CRT interference. The hardware provides the necessary computational power and system upgrade flexibility, including optional accelerometer inputs. This flexibility permits adding tracking filter implementations to the MHMS outputs, whose programmed characteristics allow selective modification of its outputs, based upon the operator's tracking inputs and environmental disturbances. The primary purpose of the filtering is to improve operator LOS placement accuracy and to improve information extraction from the HMD.

The primary update rate for P&O tracking of a single helmet is an impressive 240 updates per second (UPS). Figure 3 indicates that as many as 2 heads and 4 hands can be independently tracked using separate P&O sensors. However, this maximum configuration reduces the update rate to 60 and 30 UPS for the heads and hands, respectively. Separate update cycles are needed to first sample and filter the raw field data, and then determine true P&O estimates. This reduces the data throughput rate to at least 1/2 of the maximum update rate. As shown in Figure 3, the MHMS can be 'synched' to an external source or clock. This feature can be important for applications involving computer-generated imagery where obtaining equal updates of head P&O is desirable for the display of moving objects on the HMD. A set-up control panel (SCP) can also be interfaced directly to the cockpit side of the cockpit control panel (CCP). The SCP allows built-in test functions to be accessed and system parameters modified without removing the system from the aircraft.

The MHMS system is complemented by a programmable, semi-automated mapping fixture which, during the cockpit mapping and compensation process, is connected to the actual MHMS system that will be installed in the cockpit. The mapper's computer shares data with the MHMS processor hardware. Using a desired system error budget, the mapper system gathers preliminary raw magnetic field data based upon a completely quantitative process for allocation of the field mapping data points. Thus, the density of the sampled cockpit field data is controlled by solutions derived directly from computations involving the actual MHMS hardware and MVLE/NLE algorithms. A similar approach is used for mapping the magnetic field conditions induced by helmet-mounted scatterers, with respect to their fixed relationship to the helmet-mounted sensor, and, then, computing the needed field compensation coefficients. Taken together, this new 'systems' approach to the MHMS will provide superior tracking accuracy and complement the overall quality of the VCS MMI.

MHMS Performance: "Technology and Research-Based Requirements"

At the beginning of the VPD MHMS program, a set of performance goals was formulated based upon a programmatic requirement to demonstrate useful technology advancement and, also, the need to support research in operational aircraft environments. The most important of these were:

1. Enlarge motion box performance to provide reliable coverage of head and hand position and orientation throughout the cockpit volume,

2. Improve static accuracy to levels approaching the HUD (1 to 3 milliradians) to support most weapon system interface functions,

3. Improve update rate and throughput rate to support auditory localization, as well as, visual subsystem data requirements,

4. Provide a system capable of investigating techniques and equipment that enhances system and human operator immunity to external disturbances, thus, allowing the improvement or modification of system signal processing functions, and

5. Implement a system supporting research oriented activities that could be used in both ground-based and airborne environments.

System Concept Basis: "Establishing System Error Criteria"

Once system requirements were set down, it quickly became apparent that a new approach to the MHMS software and hardware was required. For the hardware, developing an affordable militarized architecture that was flexible and offered the highest computational rates was evolved. For the algorithms, whose characteristics would largely determine overall performance, a joint program with GMRR was initiated to identify how the data in the MHMS fields could be used to compute P&O with minimum error and identify factors that limited the computational process. For the MHMS system, allocation of a total system error budget was made early and a concerted effort has been made to meet it, particularly because of the parallel development process used in the program.

The system error budget and design equations are based upon two basic concepts: (1) expected mean-square measurement error (EMSME) is convertible into an expected mean-square estimation error (EMSEE) through a scale factor and (2) EMSME is expressible as the root mean square (RMS) of the various error sources. Equations 1 through 7 illustrate, in less than rigorous fashion, the basis for the error budget allocation. For convenience, the development is shown for LOS only, though similar processes were used for total orientation and position error. Equation 1, specifies major sources of RMS estimation error for LOS, where the expected RMS error is the square root of (1).

$$\sigma_L^2 = \sigma_\psi^2 + \sigma_\theta^2 \qquad (1)$$

where: ψ = azimuth, θ = elevation

Given prior knowledge of the MHMS field characteristics and the absence of a detailed model for its measurement, it is reasonable to assume that the errors in all measurements are independent (uncorrelated) and have equal variances which lead to the relationships in equations 2 and 3, relating estimation error to measurement error.

$$\sigma_\gamma^2 = E[(\gamma_\pi - \gamma_\pi)^2] \qquad (2)$$

and

$$\sigma_L^2 = (S'_L)^2 \sigma_\gamma^2 \qquad (3)$$

where: $E[(\gamma_\pi - \gamma_\pi)^2]$ = variance of measurement error

S'_L = sensitivity factor dependent upon magnetic field characteristics and units of measurement

Analysis performed with both GMRR and PI determined three principal independent, uncorrelated sources of measurement error. The variance of these measurement errors can be expressed by equation 4.

$$\sigma_\gamma^2 = \sigma_M^2 + \sigma_N^2 + \sigma_F^2 \qquad (4)$$

where: σ_M = mapping fixture error

σ_N = measurement noise

σ_F = field prediction error

The measurement of variance caused by noise and field measurement errors, which are essentially random and readily specified in terms of a measurement, are multiplied by an appropriate sensitivity factor (S'_L), describing magnetic field characteristics for free space and fixed scatterers, as shown in equation 5. The accuracy of the mapping fixture is more conveniently specified in terms of position and orientation errors or variances as denoted by $\sigma_{L/M}$ in equation 5. Equation 5 can be used directly to predict RMS estimation errors from the magnetic field sensitivity factors and variances of the three measurement errors.

$$\sigma_L^2 = (\sigma_{L/M})^2 + (S'_L)^2 (\sigma_N^2 + \sigma_F^2) \qquad (5)$$

Table 1 depicts the static accuracy requirements in terms of circular error probable (CEP) originally specified for the MHMS. If the assumption is made that the estimation errors are Gaussian and uncorrelated, then the relationship in equation 6 can be used to calculate the RMS error. Using (6), R and σ can be computed by equating (6) to the desired static accuracy.

Table 1
Relationship of CEP and RMS Errors

CEP	STATIC ACCURACY REQUIREMENT	R (FROM (6))	σ(RMS) DEGREES	σ(RMS) RADIANS
0.50	0.2°	$1.18\sigma = 0.2°$	0.169°	0.00295
0.99	0.4°	$3.03\sigma = 0.4°$	0.132°	0.00230

$$R^2 = -2\sigma^2 \ln[1 - P(r \le R)] \qquad (6)$$

Where: $P(r \le R) = 1 - \exp(-R / 2\sigma^2)$ is the probability of a radial error not exceeding a radius of R.

To arrive at a final estimate for the distribution of system error, one must return to equation five and use some trial estimates. To determine SNR requirements, it is more convenient to use a normalized relationship, rather than one dependent on system units. Therefore, a normalized sensitivity function G_L is substituted for S'_L in (5). PI's initial estimate for mapper error was -0.0009 radians while GMRR's research into field measurement sensitivity produced values for G_L that varied from about 1.63 for free space conditions to 4.42 for conditions involving two fixed scattering planes. Using a worst case estimate from Table 1, and substituting into (5) produces equation 7. Finally,

assuming equal RMS errors for noise and field prediction (e.g. $\sigma_N^2 = \sigma_F^2$), and a worst case G_L of 4.42, the normalized system SNR can be determined in a few simple algebraic steps, as shown below,

$$\sigma_L^2 = (0.00230)^2 = (0.0009)^2 + (G_L)^2(\sigma_N^2 + \sigma_F^2) \quad (7)$$

$$(0.5)(0.00212)^2 = (G_L)^2(\sigma_N)^2 \quad \Rightarrow \sigma_N^2 = (0.00212/G_L)^2$$
$$\Rightarrow \sigma_N = 0.000339$$

The results show for worst case conditions that a SNR of greater than 69.4 dB is needed to meet MHMS error requirements. These results helped focused continuous attention throughout the MHMS development on the procedure used to transmit and process the received electromagnetic signals, the mapping fixture design and concept for its utilization, and a number of refinements in the design of the P&O tracking algorithms that includes calculation in a floating point format.

Improving MHMS System Accuracy: "Static" and "Dynamic"

The desired error performance is demanding and exceeds the performance of the standard 12-bit MHMS systems now available. The key factors helping the new system to meet this ambitious goal are:

1. Improved MHMS algorithms that embody associated analysis explicitly defining and characterizing system error sources,

2. An integrated and automated mapping fixture, and

3. MHMS hardware that includes special front-end digital signal processing hardware, improved update rate and resolution, and a slightly larger source (radiator or transmitter) size.

An adequate system solution has required a more "technically-complete" approach to the MHMS development. As a result of the early and in-depth application of applied mathematics, the MVLE algorithm was evolved and has become a key element for improved MHMS performance. The MVLE has two especially desirable properties when used with a magnetic P&O tracking system [3]: (1) it provides the most accurate estimates from noisy measurements and (2) rather than assume a free space condition that must be corrected, as other MHMS algorithms have done, it makes direct use of the magnetic-field characteristics. It is the second property of producing a correct estimate directly from the magnetic-field conditions that allows the MHMS sensor to be tracked more accurately, even down to conducting metal surfaces. The algorithm design also enhances the incorporation of moveable scatterer compensation (for the head mounted CRTs) into the primary P&O algorithm. Oversampling of the MHMS signals and a matched-filter optimize reception of the separate and simultaneous three-axis winding signal excitation frequencies. The matched-filter can also provide attenuation of the radiated CRT deflection noise at the line rate frequency for the HMD raster imagery. The matched-filter implementation is essential to ensuring the ~70 dB signal/noise ratio (SNR) for worst case conditions is met. The SNR is also improved by a slightly larger source, true 14-bit resolution of the magnetic fields, and distance-related gain changes in the radiated B-field strength. A whole host of signal processing refinements, beyond the scope of this paper, are used to improve P&O tracking performance, including compensation for finite transducer size effects, seat-movement compensation, and reduction in the buildup of computational errors. Because the MVLE tracks incremental changes in the magnetic fields, a higher update rate improves its stability. The operation of the MVLE is signal-dependent. It can remain stable for large step inputs of several hundred degrees/second, if followed by relatively static field changes or if fed continuous incremental inputs per update cycle that change by no more than about one to two degrees. Given the new MHMS's update rate (up to 240 updates/second), the MVLE can remain stable for head movement rates of hundreds of degrees per second. However, the performance boundary is made fuzzy because of its dependence on changes between incremental updates that are determined by head movement and system configuration-dependent update rates. Therefore, as Figure 2 shows, the software includes a supervisory process which switches the MHMS P&O solution to a NLE whenever stable solution criteria are not met. A sample of simulated MVLE tracking performance is shown in Figures 4a and 4b. The figures clearly show that the presence of fixed scatterers affects the minimum error that can be obtained, but the error floor (0.0001 radians or 0.34 arc minutes) meets system error requirements.

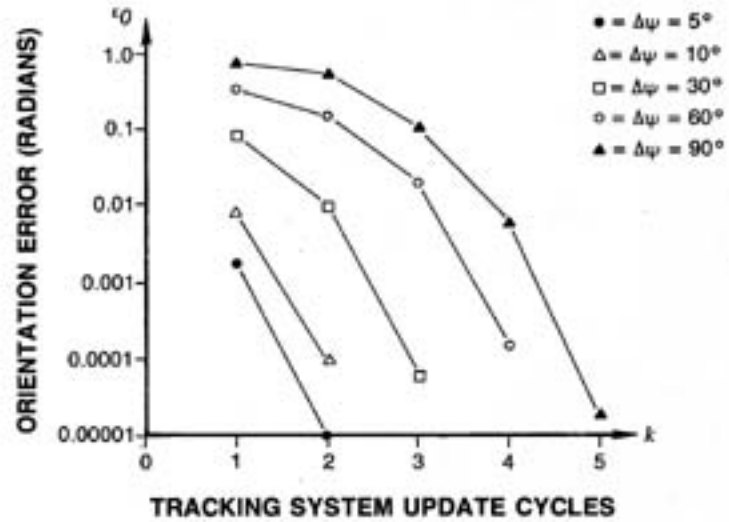

4a) Free Space Error Performance

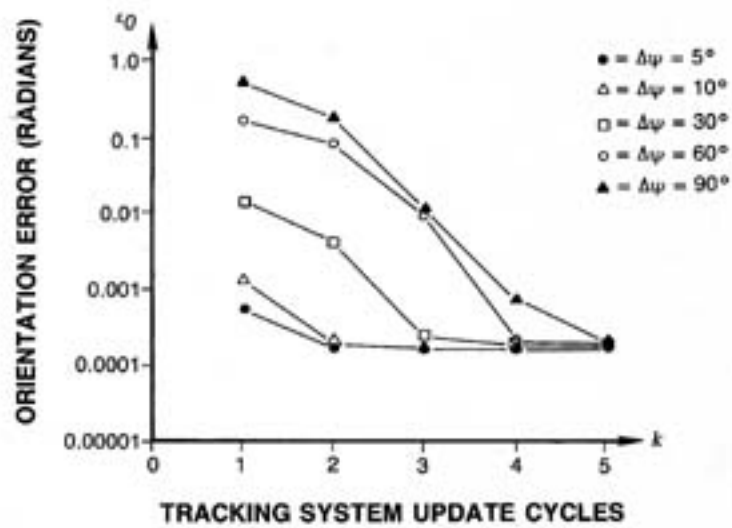

4b) Error Performance in the Presence of 2 Fixed Scatterers

Figure 4
Representative MVLE Orientation Tracking Performance for Free-Space and Fixed Scattering Environments

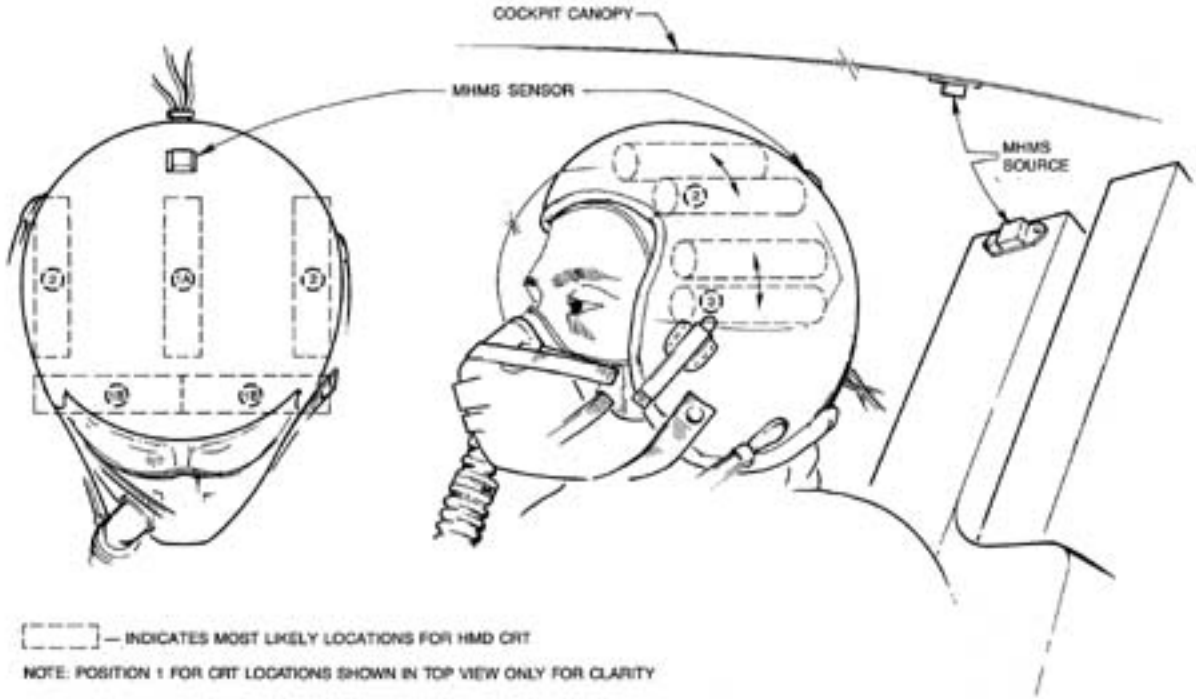

FIGURE 5
Normal Position Envelopes for Helmet-Mounted CRTs

P&O Update Rate and Resolution

The implications of the new MHMS performance for the VCS are important for both operational and test applications. The new system algorithms and hardware improve static accuracy to an estimated 1 or 2 milliradians within the 'HUD Box' (± 30° in azimuth and elevation), and to about 4-6 milliradians throughout the entire motion box. Accuracy is also quantified better by the interactive mapping fixture design, which is an important improvement for research oriented activities. Resolution has also been improved to better than 0.4 milliradians. Resolution can be a significant parameter for head-driven display presentations where small head movements can be detected on the HMD presentation under conditions of high apparent magnification. 12-bit P&O tracking systems have been observed to cause undesirable and detectable discrete jumps in the location of the display imagery on the HMD during small head movements. 14-bit systems seem to provide enough additional resolution to make this artifact virtually undetectable. There are tradeoffs associated with the improved performance. Achieving the added SNR needed to attain an honest 14-bit system requires a larger source. The larger sources measure 1.25 inches to 1.5 inches square and weigh between 7.5 and 9 ounces. The ideal mounting location in fighter aircraft is on the cockpit canopy behind the pilot. The larger and heavier MHMS source may be too heavy for mounting in some cockpit canopies (e.g. the F-16) because birdstrike induced canopy waves are more prone to cause canopy failure with the heavier MHMS source mounted in them.

Most MHMS system P&O algorithms require at least two update cycles to obtain good convergence to accurate measured dynamic head location outputs. The new MHMS is no exception, as Figure 4 indicates. The higher update rate reduces the convergence latency problem down to manageable levels. It also aids the throughput delay problems for computer-generated imagery systems which must place their imagery on the HMD according to the MHMS P&O updates. For applications, such as auditory localization, even higher update rates may be desired, because the ear can follow position update latencies in sound field vectors below one millisecond. A higher update rate also aids one area of MHMS performance that is particularly hard to quantify: system dynamic accuracy. The problem with this requirement is its measurement. Past development efforts that have investigated this problem have resulted in budgetary estimates of 3 to 4 hundred thousand dollars to produce an adequate test fixture. This is an amount that meager development budgets have not been able to handle with competing commitments of greater overall import. Perhaps a good alternative for the HMS is the achievement of higher update rates which reduce the latency between the measured and real head position and orientation and, thus, inherently improve system dynamic accuracy.

System Design and the Operating Environment: Improving Pilot Confidence in VCS

For most VCS applications, it is desirable to have the entire head movement range under which functional display presentations are to be maintained, covered by normal MHMS operation. This viewpoint is often confirmed by experience with test pilots and the feedback that they provide concerning their experiences with VCS. This circumstance can occur in many present MHMS systems when radiator-sensor range is exceeded or unusual pilot head attitudes occur during mission performance which place the helmet mounted sensor near electrically conductive surfaces. Such artifacts are deemed to be unacceptable by most operational personnel with extensive VCS experience. As mentioned, the cockpit mapping and system compensation approach employs an automated mapping fixture. The computerized control interface between the mapper and MHMS system and its algorithms permits precise sampling of the cockpit electromagnetic field environment to ascertain that the desired error performance, cockpit environment, the system software, and operational helmet configuration are adequate. Until the development of the new MHMS, movement of the helmet sensor very near to conducting surfaces could produce wildly jumping display imagery. An undesirable solution to such problems has been to freeze LOS signals at their last known 'good field' condition, but the HMD imagery as

positioned by the HMS will not reflect true P&O. The new MHMS algorithms now permit the sensor P&O to be tracked down to conducting metal surfaces and permit the graceful degradation of system accuracy and resolution to 13-bits, 12-bits, etc. for conditions where the maximum full resolution source-sensor range is exceeded. Therefore, a more stringent sensor tracking requirement that favors reliability of the MHMS-controlled placement of the HMD scene contents does not now imply a new, high risk development effort. It does imply, however, a greater allocation of computational power to the MHMS function than is offered by other available variations of the MHMS, militarized or commercial.

Another aspect of the MHMS signal quality problem involves the effects of head-mounted dynamic scatterers. Using a helmet orientation and position tracking system to direct weapons and place/stabilize imagery on the HMD, makes consistent system P&O outputs a necessity. Obtaining P&O tracking consistency for the MHMS involves two major system integration issues. The first is where the pilot must or might place his helmet during any mission eventuality. The second is the spatial relationships of both the other helmet components (especially those that can distort or attenuate the MHMS magnetic field) and the MHMS source (transmitter) with respect to the helmet sensor location. The major, but not the only, significant helmet-mounted scatterer is the CRT. Figure 5 illustrates the nominal location volumes of the helmet mounted CRTs for the usual binocular and monocular/biocular HMD configurations with respect to the MHMS sensor. The ideal mounting location for the MHMS is on the crown of the helmet, in part, because this location is distanced from many sources of interference, and because the ideal location for the MHMS source is to the rear of the pilot's head in the helmet canopy or above the seat back. CRT locations 1 and 2, shown in Figure 5, can be particularly bothersome to reliable MHMS operation for head attitudes that include a directed LOS toward the side or rear of the aircraft with positive elevation angles. VCS integration planning should give consideration to such relationships and the tradeoffs they imply. In so doing, an attempt should be made to place the sensor on the helmet and the transmitter in the cockpit at positions where obscuration of the transmitter's signal (by a helmet CRT, etc.) due to head movement is unlikely or impossible. Dynamic compensation for the movement of the head mounted CRT(s) may be critical to overall system tracking performance, especially if two CRTs are used or the mounting geometries of the CRT(s) and sensor cannot have optimum locations. A top-mounted CRT centered on the crown of the flight helmet for biocular HMD designs often poses the most serious problem.

One former approach to compensating for dynamic scatterers was to characterize the secondary field of the moveable scatterer and compensate for its effects using a dipole or multi-dipole model. This technique has not worked well, because the dipole locations are not readily determined and their scattering parameters depend on the number of dipoles used (quickly raising computational overhead) and an accurate knowledge of the location of each dipole. Recent experience with an alternate approach [4] that characterizes the scattered field as a sum of the multipole fields appears to have produced superior results in laboratory testing. However, full operational test results will not be known for some months after the publishing date of this paper. In this technique, the multipole moments are linearly related to the primary magnetic field and its gradients by a set of scattering coefficients that are readily determined from sets of scattered-field measurements by linear-coefficient fitting techniques.

The effect of fixed and dynamic scatterers on MHMS operation is important enough in the design and integration of VCS that a short discussion of basic considerations is appropriate. An initial assessment of the MHMS environment can be made to help reduce potential problems during final system integration by noting a few geometric relationships and the worst-case conditions for MHMS field distortion caused by fixed and helmet-mounted moveable scatterers. Figure 6 depicts the worst-case situation for a fixed scatterer in relation to the transmitter(source)-receiver(sensor) distance. This occurs when the sensor is directly below the source. Since amplitude for the MHMS quasi-static field is proportional to the inverse cube of distance, the worst case distortion ratio (D) is given by equation (8) where 'ρ' represents distance. Using (8) and a ratio of 5.5 for ρ_2/ρ_1, one computes a distortion ratio of $1/(11-1)^3 = 0.001$ or 0.1 percent. A ratio of 2.82 would produce a distortion ratio of 1 percent.

$$D = (\rho_1)^3/(2\rho_2-\rho_1)^3 = 1/(2\rho_2/\rho_1 - 1)^3 \qquad (8)$$

Where: $\rho_3 = 2\rho_2-\rho_1$

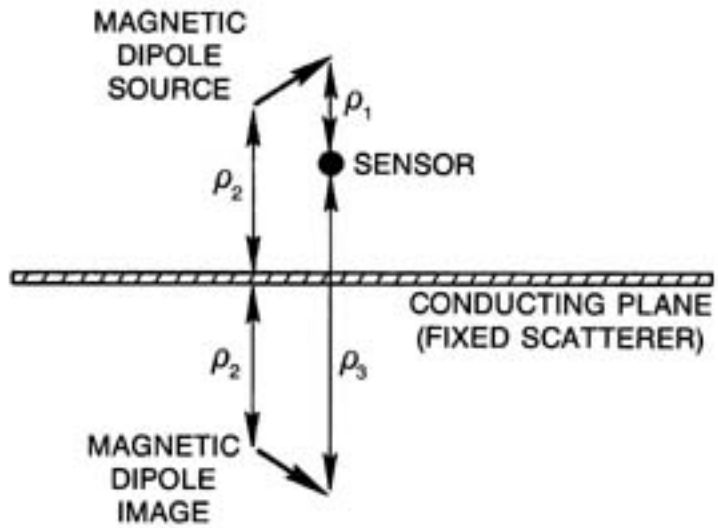

Figure 6
Fixed Scatterer Relationships

Work performed during the development of the VPD MHMS at AAMRL and GMRR and documented in [4] helped to characterize the field distortion due to the presence of several types of simply-shaped dynamic scatterers. These include spheres and prolate spheroids which resemble the shape of the normal cylindrical CRT. For the moveable scatterer, the ratio between scatterer-to-sensor-distance (ρ') and scatterer size (ℓ) becomes the dominant relationship for computing the distortion ratio. For the inverse cube relationship we now get $D = (\ell/\rho')^3$. As shown for the spherical scatterer in Figure 7, the distortion contours are simply spheres centered about the scattering sphere. For example, in Figure 7, a length of 4.64 ℓ (where ℓ = radius of the scattering sphere) produces a distortion ratio of 1 percent. As compared to a sphere with radius of ℓ_r, a prolate spheroid with semiaxis of $\ell_1 = \ell_r$ and $\ell_2 = \ell_3 = 0.2\ \ell_r$, representing about the eccentricity of the HMD CRT, produces maximum scattering no worse than about twice that of the sphere. The point of this discussion is that the helmet system design greatly affects the method and complexity of the required dynamic compensation process in the MHMS. If the HMD design permits a lower mounting location for the CRTs as shown for location 3, in Figure 5, then the MHMS sensor may be placed at or near the top of the helmet. Located in this manner, the CRT scatterer(s) have a much reduced probability of blocking the MHMS signal during head movement. The minimum scatterer/sensor

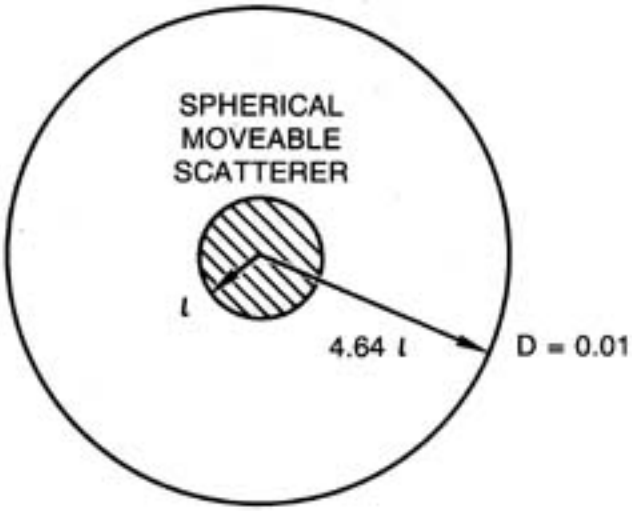

Figure 7
Moveable Scatterer Distortion Contours Near A Conducting Sphere

distance ratio will also be relatively large. A biocular design, as mentioned earlier, may, with most perferred sensor mounting locations, provide an increased opportunity for the scatterer to block the source's signal to the sensor. Alternately, placing the MHMS sensor on top of the helmet near the CRT scatterer to prevent signal blockage by the scatterer will significantly reduce (in a negative manner) the scatterer-to-sensor-distance to scatterer size ratio.

It is also wise, and usually necessary, to imbed some sort of capability into the MHMS to overcome situations where the HMD CRTs will completely block the signal to the receiver until an unobstructed line-of-sight (LOS) can be reestablished with the transmitter. The only good alternative is usually to hold the MHMS P&O output data at the last good field data point until radiated field conditions return to acceptable levels.

MHMS system signal properties are also influenced significantly by the material composition and structure of the overall VCS design. Of greatest concern are materials which, because of their physical properties, severely attenuate or distort the primary magnetic fields. For example, conducting metal on the helmet, per se, does not significantly degrade the uncompensated performance of the MHMS. Rather large conducting surfaces, structures that allow current loops to form, and ferromagnetic materials are the major contributors to reduced performance (i.e. greater system error). In particular, the VCS system integrator should examine its subcontractor's production techniques to ensure that unexpected problem sources will not be present. One significant problem involved aluminum shimming rings for the HMD relay lens elements which were discovered to be causing severe dynamic scattering of the MHMS fields that was hard to compensate for satisfactory error performance. The solution was to place a notch in each ring to prevent formation of current loops and secondary magnetic fields. Thus, an improved system design, as represented by the VPD MHMS and thoughtful integration, can complement each other to produce a more reliable pilot-centered or operator-centered system.

Optimizing Sight and Display Utilization

In this author's opinion, optimization is always a relative concept – for one usually does the best that can be done at a given time with available resources. Among the VCS optimization issues that have resisted a major improvement are the degradation of HMD performance caused by aircraft vibration transmitted to the head/helmet, and the effects of system P&O delays or head movement artifacts on operator LOS tracking. LOS tracking can be further divided into perhaps at least seven categories or modes, which may have differing implementations for optimal tracking filter solutions. A possible set is:

1) Pointing (at a static target),
2) Tracking (a distant moving target),
3) Close Tracking (target moving close to an observer)
4) Handoff (of LOS from one observer to another for any mode 1-3),
5) Searching (for a new target),
6) Transition (between one LOS and another), and
7) Wandering (no specific LOS objective).

Both aircraft vibration and system induced LOS transport delays for display symbology positioning can severely degrade the operator's ability to extract and/or use information presented on the HMD. As shown in Figure 2, the MHMS electronics unit contains four imbedded processor boards. One of these processor boards was intended for use in aiding the investigation of the biodynamic interference suppression (vibration) and LOS tracking issues. Figure 3 depicts accelerometer inputs that can be used as an option for receiving direct inputs of head and aircraft vibration. The use of accelerometer inputs can provide improved stabilization of the HMD image, and needs further investigation. Often, however, systems utilizing accelerometer inputs exclusively perform poorly during large rotations of the head. Stabilization of the LOS signals, as derived from the MHMS P&O updates, using adaptive filtering, is also possible. The effectiveness of such stabilization may be reduced, though, by the possible relatively large phase errors that can occur by attempting to stabilize over a 5-Hz bandwidth with samples taken at 30 or 60 Hz. The improved update rate of the VPD MHMS and the use of Kalman filters or complementary filters (actually a form of Kalman filtering) that combine measurements of head P&O with accelerometer outputs may overcome these difficulties. The VPD MHMS provides not only the capability to run such algorithms, as they could be run in any computer simulation environment, but also the capability to test them in relation to operator performance in the actual airborne environment.

The programmable flexibility of the VPD MHMS also allows the benefits of advanced cueing modes to be implemented and studied. One example is coordinate intersection cueing (CIC). In a CIC mode, physical cockpit switches, or switches imaged onto a panel mounted display, are referenced to the MHMS source's coordinate system. Utilizing the 6DOF measurements of the MHMS, the location of these switches is constantly recomputed by the MHMS, allowing 'no-hands-needed' LOS activation by the pilot with his MHMS LOS reticle. This mode effectively duplicates a portion of the oculometer function without the need to add this hardware to the helmet.

Summary

The VCS MMI represents a significant departure from the standard cockpit MMI in use today. The development approach for the major VPD systems comprising the VCS MMI, should, if properly utilized, aid the transition to this advanced cockpit interface. For the MHMS, the closed-loop system implementation between the installation and operational hardware should aid both the researcher and manufacturer. The benefits for research personnel should be extremely reliable data describing the accuracy of the VCS implementation and very flexible airborne-qualified test instrumentation. The result for a potential manufacturer should be better a priori knowledge concerning interface and production issues. For example, a calibration process

reliable and accurate enough to guarantee that the mapping process for one cockpit can apply in a labor savings manner to like configured cockpits, thus permitting the mapping of one cockpit to suffice for an entire block of similar aircraft. Whether this system approach meets expectations remains for the delivery of the production systems in 1991 and out-year testing and experience to confirm.

REFERENCES and SELECTED BIBLIOGRAPHY

[01] Buchroeder, R.A. and Kocian, D. F., Display System Analysis for the LHX Helicopter Application, US Air Force Armstrong Aerospace Medical Research Laboratory, Wright-Patterson AFB OH, 1989, AAMRL-TR-89-001.

[02] Kocian, D.F., Design Considerations for Virtual Panoramic Display (VPD) Helmet Systems, AGARD Symposium on The Man-Machine Interface in Tactical Aircraft Design and Combat Automation, AGARD-CP-425, July, 1988.

[03] Raab, Frederick H., Ph.D., Algorithms for Position and Orientation Determination in Magnetic Helmet Mounted Sight System, US Air Force Armstrong Patterson AFB OH, 1982, AAMRL-TR-82-045.

[04] Raab, Frederick H., Ph.D., and Brewster, C. C., Magnetic-Multipole Technique for Moveable-Scatterer Compensation, US Air Force Armstrong Aerospace Medical Research Laboratory, Wright-Patterson AFB OH, 1988, AAMRL-TR-88-054.

[05] Task, H.L., Kocian, D.F., and Brindle, J.H., Helmet Mounted Displays: Design Considerations, Advancement on Visualization Techniques, AGARDograph No. 255, October 1980.